Purpose of Document				Type of Document
Information		for Approval	X	Detail Design

Place for digital signature of Contractor

Place for digital signature of Revisor

Rev.	Revision Description	Drawn by	Checked by	Approved by Designer	Approved by Contractor	Date
02	After FAT	Tamara Trogrlić	Antonio Aleksić	Grga Kolić		15.6.2026.
01	For manufacturing	Tamara Trogrlić	Antonio Aleksić	Grga Kolić		7.5.2026.
00	First issue	Tamara Trogrlić	Antonio Aleksić	Grga Kolić		27.2.2026.

Document No. (CSD) PER-E-8-KA1&KA2-SCH-001-02-VHHR

Employer: epcg Elektroprivreda Crne Gore AD

Consultant: ENERGOPROJEKT HIDROINŽENJERING a.d.

Contractor: VOITH VOITH HYDRO GmbH&CoKG St. Pölten

Project:

Reconstruction and Modernisation of HPP Perucica - Phase II

Title:

Unit KA1 control cubicle circuit diagrams

2

CONFIDENTIAL, ALL RIGHTS RESERVED DIN 34

Format ISO/DIN A3

Approved by Contractor		
Approved by Designer	Grga Kolić	15.6.2026.
Checked by	Antonio Aleksić	15.6.2026.
Drawn by	Tamara Trogrlić	15.6.2026.

Reconstruction and Modernisation of HPP Perucica - Phase II

PROJECT NAME

EMPLOYER

SINTAKSA A Voith Company

Sintaksa - A Voith Company
Ulica Domovinskog rata 104Ç, 21 000 Split, Hrvatska

DESIGNER

Unit KA1 control cubicle circuit diagrams

TITLE PAGE

DRAWING No.:	REV No.:	= UACJA10GH100	
PERU-01-19-170-31-001	02	+ UACJA10	
Designer No.:	SALES No.:	PAGE	1
		PAGE	1 / 156

CONFIDENTIAL, ALL RIGHTS RESERVED DIN 34

Page	Page type	Page description	Rev.
1	Title page / cover sheet	TITLE PAGE	
2	Table of contents	TABLE OF CONTENTS	
3	Table of contents	TABLE OF CONTENTS	
4	Schematic multi-line	DESIGNATION CODES	
5	Schematic multi-line	AC DISTRIBUTION	
6	Schematic multi-line	DC DISTRIBUTION 220VDC	
7	Schematic multi-line	DC DISTRIBUTION 220VDC	
8	Schematic multi-line	DC DISTRIBUTION 24VDC	
9	Schematic multi-line	DC DISTRIBUTION 24VDC	
10	Schematic multi-line	DC DISTRIBUTION 24VDC	
11	Schematic multi-line	DC DISTRIBUTION 24VDC	
12	Schematic multi-line	PLC CONFIGURATION	
13	Schematic multi-line	PLC CONFIGURATION	
14	Schematic multi-line	PLC CONFIGURATION	
15	Schematic multi-line	PLC DIGITAL INPUTS: INTERNAL SIGNALS	
16	Schematic multi-line	DIGITAL INPUTS: 0.0 - 0.7	
17	Schematic multi-line	DIGITAL INPUTS: 1.0 - 1.7	
18	Schematic multi-line	DIGITAL INPUTS: 2.0 - 2.7	
19	Schematic multi-line	DIGITAL INPUTS: 3.0 - 3.7	
20	Schematic multi-line	DIGITAL INPUTS: 4.0 - 4.7	
21	Schematic multi-line	DIGITAL INPUTS: 5.0 - 5.7	
22	Schematic multi-line	DIGITAL INPUTS: 6.0 - 6.7	
23	Schematic multi-line	DIGITAL INPUTS: 7.0 - 7.7	
24	Schematic multi-line	DIGITAL INPUTS: 8.0 - 8.7	
25	Schematic multi-line	DIGITAL INPUTS: 9.0 - 9.7	
26	Schematic multi-line	DIGITAL INPUTS: 10.0 - 10.7	
27	Schematic multi-line	DIGITAL INPUTS: 11.0 - 11.7	
28	Schematic multi-line	DIGITAL INPUTS: 12.0 - 12.7	
29	Schematic multi-line	DIGITAL INPUTS: 13.0 - 13.7	
30	Schematic multi-line	DIGITAL INPUTS: 14.0 - 14.7	
32	Schematic multi-line	DIGITAL INPUTS: 16.0 - 16.7	
34	Schematic multi-line	DIGITAL INPUTS: 18.0 - 18.7	
31	Schematic multi-line	DIGITAL INPUTS: 15.0 - 15.7	
33	Schematic multi-line	DIGITAL INPUTS: 17.0 - 17.7	
35	Schematic multi-line	DIGITAL INPUTS: 19.0 - 19.7	
36	Schematic multi-line	DIGITAL OUTPUTS: 0.0 - 0.7	
37	Schematic multi-line	DIGITAL OUTPUTS: 1.0 - 1.7	
38	Schematic multi-line	DIGITAL OUTPUTS: 2.0 - 2.7	
39	Schematic multi-line	DIGITAL OUTPUTS: 3.0 -3.7	
40	Schematic multi-line	DIGITAL OUTPUTS: 4.0 - 4.7	

Page	Page type	Page description	Rev.
42	Schematic multi-line	DIGITAL OUTPUTS: 6.0 - 6.7	
41	Schematic multi-line	DIGITAL OUTPUTS: 5.0 - 5.7	
43	Schematic multi-line	DIGITAL OUTPUTS: 7.0 - 7.7	
44	Schematic multi-line	ANALOG INPUTS: 1 - 4	
45	Schematic multi-line	ANALOG INPUTS: 5 - 8	
46	Schematic multi-line	ANALOG OUTPUTS: 1 - 2	
47	Schematic multi-line	ANALOG OUTPUTS: 3 - 4	
48	Schematic multi-line	SPEED MEASUREMENT	
49	Schematic multi-line	HPU CONTROL	
50	Schematic multi-line	HPU CONTROL	
51	Schematic multi-line	ESD VALVE CONTROL	
52	Schematic multi-line	MIV CONTROL 24VDC	
53	Schematic multi-line	LOCAL CONTROL	
54	Schematic multi-line	CB CONTROL	
55	Schematic multi-line	EXCITATION CB TRIP COMMAND	
56	Schematic multi-line	EMERGENCY SHUTDOWN	
57	Schematic multi-line	EMERGENCY SHUTDOWN	
58	Schematic multi-line	GENERATOR PROTECTION ESD	
59	Schematic multi-line	SYNCHRONIZATION CONTROL	
60	Schematic multi-line	SYNCHRONIZATION CONTROL	
61	Schematic multi-line	SYNCHRONIZATION	
62	Schematic multi-line	SYNCHRONIZATION	
63	Schematic multi-line	SYNCHRONIZATION	
64	Schematic multi-line	SYNCHRONIZATION	
65	Schematic multi-line	SIGNALIZATION - EXCITATION	
66	Schematic multi-line	SIGNALIZATION - PROTECTION	
67	Schematic multi-line	SIGNALIZATION	
68	Schematic multi-line	SIGNAL COLUMN	
69	Schematic multi-line	ALARM ANNUCIATOR - ALARM	
70	Schematic multi-line	ALARM ANNUCIATOR - TRIP	
71	Schematic multi-line	ALARM ANNUCIATOR - TRIP	
72	Schematic multi-line	SPARE CONTACTS	
73	Schematic multi-line	CT CIRCUITS	
74	Schematic multi-line	VT CIRCUITS	
75	Schematic multi-line	VT CIRCUITS	
76	Schematic multi-line	VT CIRCUITS	
77	Schematic multi-line	VT CIRCUITS	
78	Schematic multi-line	SWITCH	
79	Schematic multi-line	COMMUNICATION	
80	Overview	HMI - TOUCH PANEL	

Page	Page type	Page description	Rev.
81	Overview	PLC OVERVIEW	
82	Overview	PLC OVERVIEW CPU	
83	Overview	PLC OVERVIEW	
84	Overview	PLC OVERVIEW COMM.	
85	Overview	PLC OVERVIEW TM COUNT.	
86	Overview	PLC OVERVIEW TM COUNT.	
87	Overview	PLC OVERVIEW DI	
88	Overview	PLC OVERVIEW DI	
89	Overview	PLC OVERVIEW DI	
90	Overview	PLC OVERVIEW DI	
91	Overview	PLC OVERVIEW DI	
92	Overview	PLC OVERVIEW DI	
93	Overview	PLC OVERVIEW DI	
94	Overview	PLC OVERVIEW DI	
95	Overview	PLC OVERVIEW DI	
96	Overview	PLC OVERVIEW DI	
97	Overview	PLC OVERVIEW DQ	
98	Overview	PLC OVERVIEW DQ	
99	Overview	PLC OVERVIEW DQ	
100	Overview	PLC OVERVIEW DQ	
101	Overview	PLC OVERVIEW AI 4XI	
102	Overview	PLC OVERVIEW AI 2XI	
103	Overview	PLC OVERVIEW AI 2XI	
104	Overview	PLC OVERVIEW AQ	
105	Overview	PLC OVERVIEW AI ENERGY METER	
106	Overview	MULTIMETER	
107	Overview	SWITCH 1	
108	Overview	SWITCH 2	
109	Overview	AUTOMATIC SYNCHRONIZER	
110	Overview	PANEL MOUNTED FAULT ANNUCIATOR	
111	Device tag list	Device tag List	
112	Device tag list	Device tag List	
113	Device tag list	Device tag List	
114	Device tag list	Device tag List	
115	Device tag list	Device tag List	
116	Device tag list	Device tag List	
117	Device tag list	Device tag List	
118	Device tag list	Device tag List	
119	Device tag list	Device tag List	
120	Device tag list	Device tag List	

Page	Page type	Page description	Rev.
121	Device tag list	Device tag List	
122	Device tag list	Device tag List	
123	Device tag list	Device tag List	
124	Device tag list	Device tag List	
125	Device tag list	Device tag List	
126	Device tag list	Device tag List	
127	Device tag list	Device tag List	
128	Device tag list	Device tag List	
129	Device tag list	Device tag List	
130	Device tag list	Device tag List	
131	Device tag list	Device tag List	
132	Device tag list	Device tag List	
133	Device tag list	Device tag List	
134	Device tag list	Device tag List	
135	Cable diagram	CABLE DIAGRAM	
136	Cable diagram	CABLE DIAGRAM	
137	Cable diagram	CABLE DIAGRAM	
138	Cable diagram	CABLE DIAGRAM	
139	Cable diagram	CABLE DIAGRAM	
140	Cable diagram	CABLE DIAGRAM	
141	Cable diagram	CABLE DIAGRAM	
142	Cable diagram	CABLE DIAGRAM	
143	Cable diagram	CABLE DIAGRAM	
144	Cable diagram	CABLE DIAGRAM	
145	Cable diagram	CABLE DIAGRAM	
146	Cable diagram	CABLE DIAGRAM	
147	Cable diagram	CABLE DIAGRAM	
148	Cable diagram	CABLE DIAGRAM	
149	Cable diagram	CABLE DIAGRAM	
150	Cable diagram	CABLE DIAGRAM	
151	Cable diagram	CABLE DIAGRAM	
152	Summarized parts list	Summarized parts list	
153	Summarized parts list	Summarized parts list	
154	Summarized parts list	Summarized parts list	
155	Summarized parts list	Summarized parts list	
156	Summarized parts list	Summarized parts list	

CONFIDENTIAL, ALL RIGHTS RESERVED DIN 34

Format ISO/DIN A3

Approved by Contractor			Reconstruction and Modernisation of HPP Perucica - Phase II	epcg	SINTAKSA A Voith Company Sintaksa - A Voith Company Ulica Domovinskog rata 104C, 21 000 Split, Hrvatska	Unit KA1 control cubicle circuit diagrams	DRAWING No.: PERU-01-19-170-31-001	REV No.: 02	= UACJA10GH100
Approved by Designer	Grga Kolić	15.6.2026.							+ UACJA10
Checked by	Antonio Aleksić	15.6.2026.				TABLE OF CONTENTS	Designer No.:	SALES No.:	PAGE 3
Drawn by	Tamara Trogrlić	15.6.2026.	PROJECT NAME	EMPLOYER	DESIGNER				PAGE 3 / 156

SYSTEM/EQUIPMENT	
=UAMKC10GH100+UAMKC11	EXCITATION
=UACHA10GH100+UACHA10	PROTECTION
=0UA01+UV01	VIBRATION MONITORING

DEVICE

A -	Assemblies, subassemblies
B -	Transducers from non-electric to electric quantities or vice versa
C -	Capacitors
D -	Binary elements
E -	Miscellaneous
F -	Protective devices
G -	Generators, power supplies
H -	Signaling devices
J -	
K -	Relays, contactors
L -	Inductors, reactors
M -	Motors
N -	Amplifiers, controllers
P -	Measuring instruments, test equipment
Q -	Switching devices for power circuits
R -	Resistors
S -	Switches for control circuits, selectors
T -	Transformers
U -	Modulators
V -	Tubes, semiconductors
W -	Transmission paths, cables, busbars, antennas
X -	Terminals, plugs, sockets
Y -	Electricaly operated mechanical devices
Z -	Terminations, hybrid transformers, filters, equilizers, limiters
100..199 -	Station services
200..299 -	Control
300..399 -	Protection
400..499 -	Measuring
500..599 -	Freely disposable

DOCUMENT

001...099 -	Text documents, chapters
100...999 -	Drawings: Block-diagrams, Single line diagrams, General arrangement drawings, Circuit diagrams, Cubicle layouts, Cubicle assigned drawings, Cable lists, cable core lists, Grounding and lightning, Unassigned drawings,

CIRCUIT DIAGRAM INDEX

A -	Indexes, title sheet, document list
B -	Function diagrams
C -	Designation code
D -	AC power supply (heating, lighting voltage distribution, fuses...)
E -	
F -	
G -	DC power supply (voltage distribution...)
H -	Signaling devices
J -	
K -	
L -	Operating mechanisms for switching devices (circuit breakers, disconnectors...)
M -	Control (local, remote, station...)
N -	Protection
P -	Interlocking
Q -	Position indication (local, remote, station...)
R -	Alarm (signaling, monitoring...)
S -	Instruments transformers circuits (measuring, protection...)
T -	Measuring (local, remote station... unless under "S")
U -	Feedback control (voltage regulator...)
V -	Communication
W -	Wiring diagrams, terminal matrix
X -	Cable list, cable core list
Y -	
Z -	Equipment documents for "C" to "W"

WIRE AND CABLE COLOURS

BK -	Black
BN -	Brown
RD -	Red
OG -	Orange
YE	Yellow
GN -	Green
BU -	Blue
VT -	Violet
GY -	Grey
WH -	White
PK -	Pink
TO -	Turquaise
GNYE -	Green yellow
LB -	Light Blue

CONFIDENTIAL, ALL RIGHTS RESERVED DIN 34

Format ISO/DIN A3

3 5

Approved by Contractor			Reconstruction and Modernisation of HPP Perucica - Phase II	epcg	SINTAKSA A Voith Company Sintaksa - A Voith Company Ulica Domovinskog rata 104C, 21 000 Split, Hrvatska	Unit KA1 control cubicle circuit diagrams	DRAWING No.:	REV No.:	= UACJA10GH100
Approved by Designer	Grga Kolić	15.6.2026.					PERU-01-19-170-31-001	02	+ UACJA10
Checked by	Antonio Aleksić	15.6.2026.				DESIGNATION CODES	Designer No.:	SALES No.:	PAGE 4
Drawn by	Tamara Trogrlić	15.6.2026.	PROJECT NAME	EMPLOYER	DESIGNER				PAGE 4 / 156

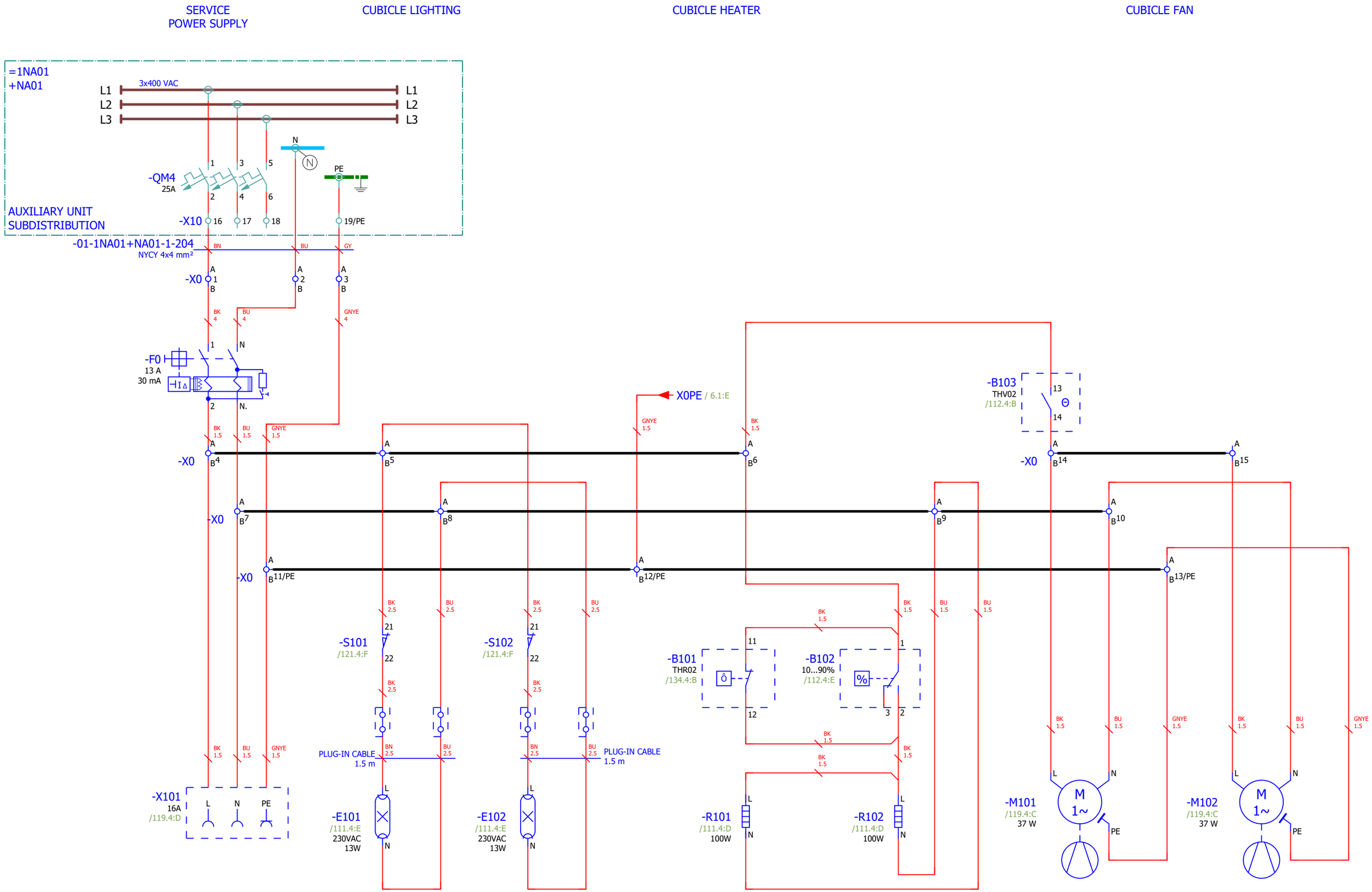

CONFIDENTIAL, ALL RIGHTS RESERVED DIN 34

Format ISO/DIN A3

Approved by Contractor			Reconstruction and Modernisation of HPP Perucica - Phase II	epcg	SINTAKSA A Voith Company Sintaksa - A Voith Company Ulica Domovinskog rata 104C, 21 000 Split, Hrvatska	Unit KA1 control cubicle circuit diagrams	DRAWING No.:	REV No.:	= UACJA10GH100
Approved by Designer	Grga Kolić	15.6.2026.					PERU-01-19-170-31-001	02	+ UACJA10
Checked by	Antonio Aleksić	15.6.2026.				AC DISTRIBUTION	Designer No.:	SALES No.:	PAGE 5
Drawn by	Tamara Trogrlić	15.6.2026.	PROJECT NAME	EMPLOYER	DESIGNER				PAGE 5 / 156

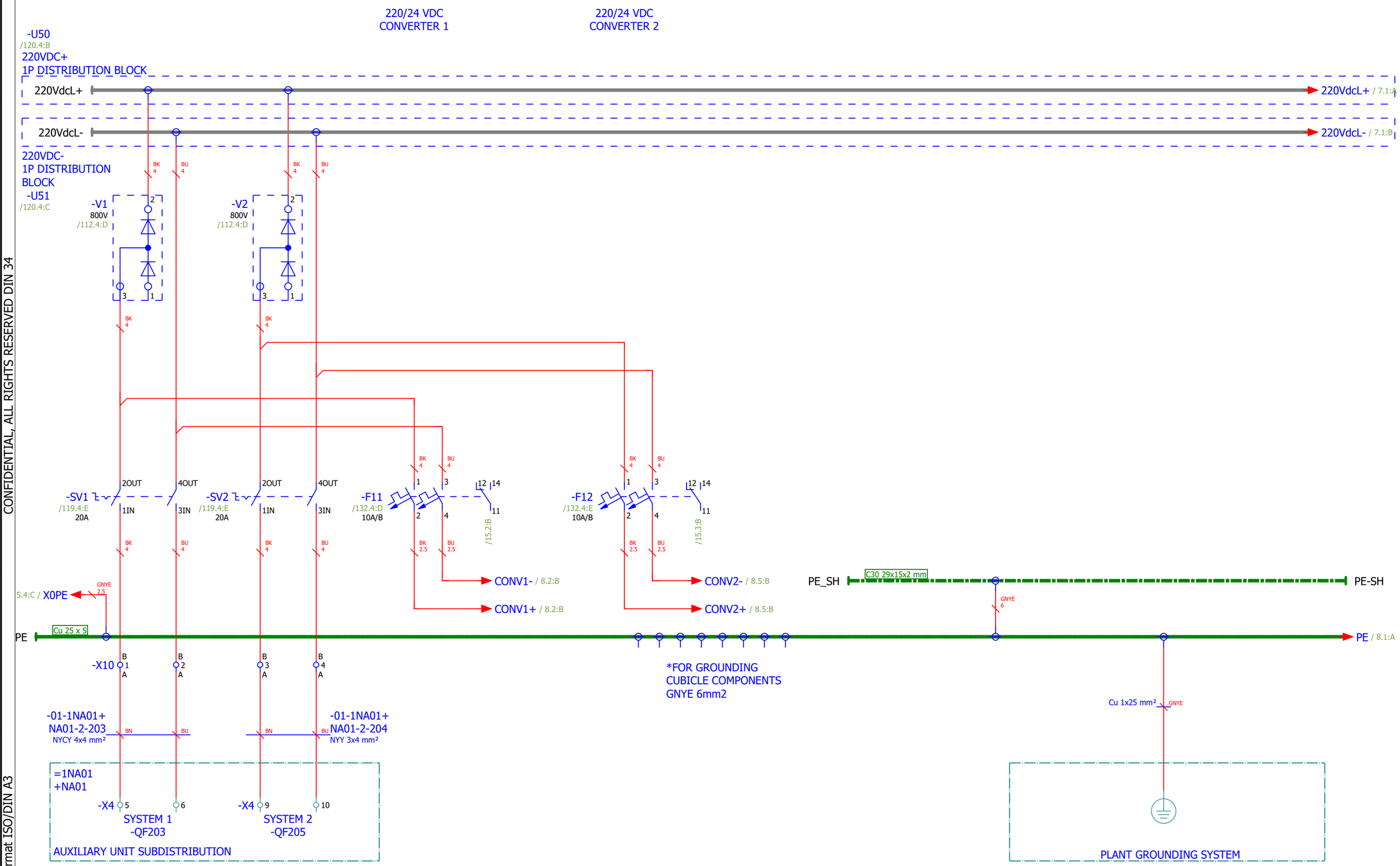

CONFIDENTIAL, ALL RIGHTS RESERVED DIN 34

Format ISO/DIN A3

Approved by Contractor			Reconstruction and Modernisation of HPP Perucica - Phase II	epcg	SINTAKSA A Voith Company Sintaksa - A Voith Company Ulica Domovinskog rata 104C, 21 000 Split, Hrvatska	Unit KA1 control cubicle circuit diagrams	DRAWING No.: PERU-01-19-170-31-001	REV No.: 02	= UACJA10GH100
Approved by Designer	Grga Kolić	15.6.2026.							+ UACJA10
Checked by	Antonio Aleksić	15.6.2026.				DC DISTRIBUTION 220VDC	Designer No.:	SALES No.:	PAGE 6
Drawn by	Tamara Trogrlić	15.6.2026.	PROJECT NAME	EMPLOYER	DESIGNER				PAGE 6 / 156

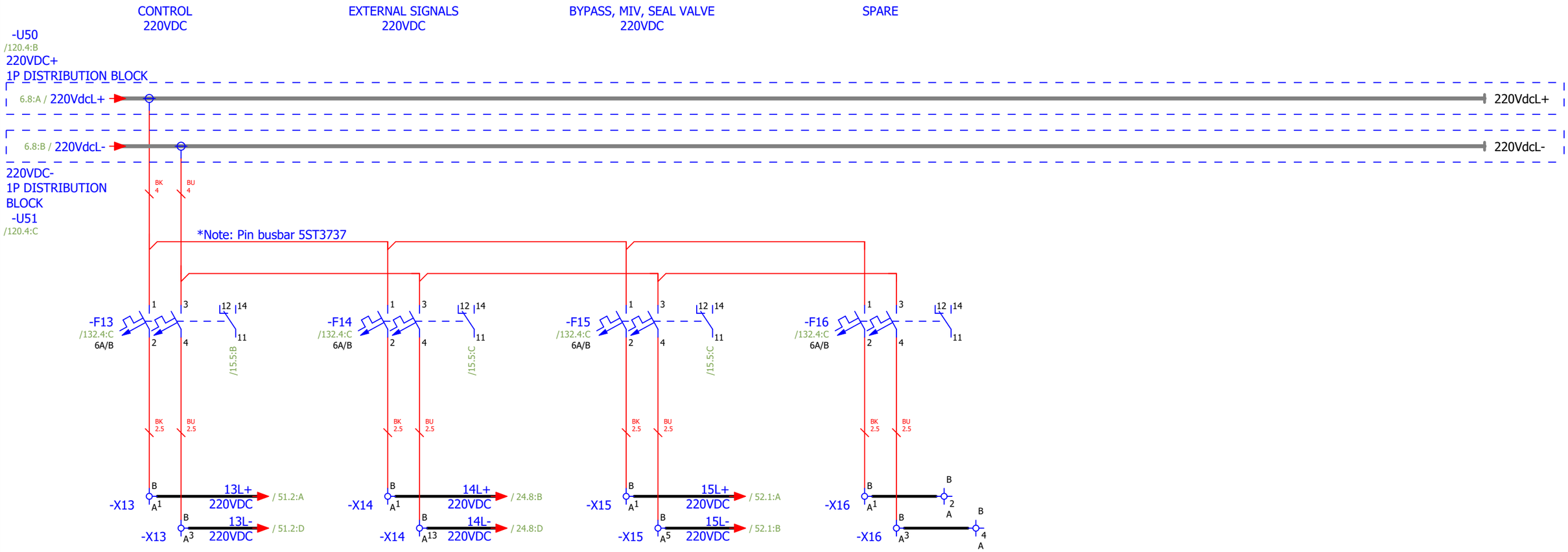

CONFIDENTIAL, ALL RIGHTS RESERVED DIN 34

Format ISO/DIN A3

Approved by Contractor			Reconstruction and Modernisation of HPP Perucica - Phase II	epcg	SINTAKSA A Voith Company Sintaksa - A Voith Company Ulica Domovinskog rata 104C, 21 000 Split, Hrvatska	Unit KA1 control cubicle circuit diagrams	DRAWING No.:	REV No.:	= UACJA10GH100
Approved by Designer	Grga Kolić	15.6.2026.					PERU-01-19-170-31-001	02	+ UACJA10
Checked by	Antonio Aleksić	15.6.2026.				DC DISTRIBUTION 220VDC	Designer No.:	SALES No.:	PAGE 7
Drawn by	Tamara Trogrlić	15.6.2026.	PROJECT NAME	EMPLOYER	DESIGNER				PAGE 7 / 156

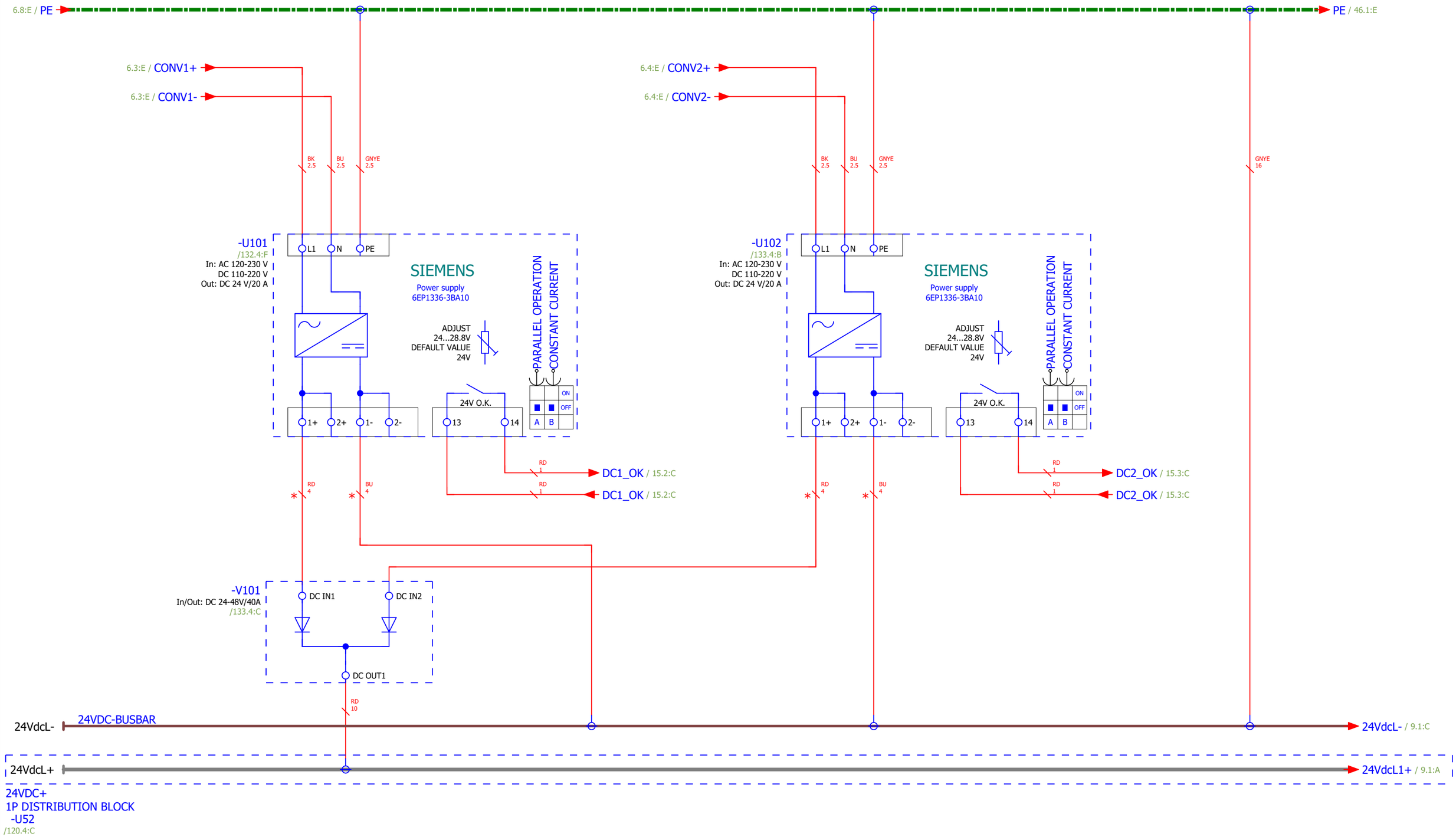

CONFIDENTIAL, ALL RIGHTS RESERVED DIN 34

Format ISO/DIN A3

Approved by Contractor			Reconstruction and Modernisation of HPP Perucica - Phase II	epcg	SINTAKSA A Voith Company Sintaksa - A Voith Company Ulica Domovinskog rata 104C, 21 000 Split, Hrvatska	Unit KA1 control cubicle circuit diagrams	DRAWING No.: PERU-01-19-170-31-001	REV No.: 02	= UACJA10GH100
Approved by Designer	Grga Kolić	15.6.2026.							+ UACJA10
Checked by	Antonio Aleksić	15.6.2026.				DC DISTRIBUTION 24VDC	Designer No.:	SALES No.:	PAGE 8
Drawn by	Tamara Trogrlić	15.6.2026.	PROJECT NAME	EMPLOYER	DESIGNER				PAGE 8 / 156

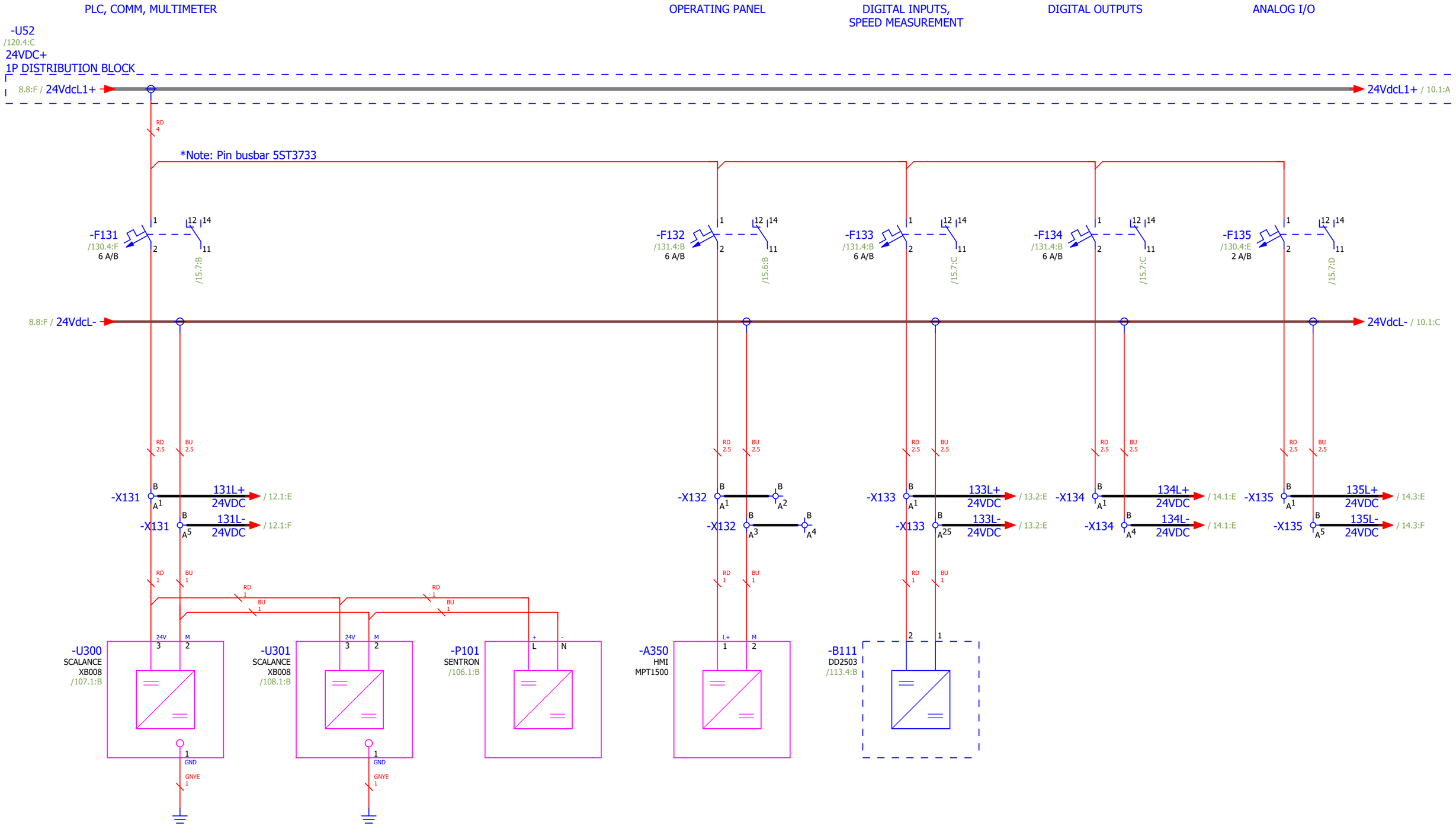

CONFIDENTIAL, ALL RIGHTS RESERVED DIN 34

Format ISO/DIN A3

Approved by Contractor			Reconstruction and Modernisation of HPP Perucica - Phase II	epcg	SINTAKSA A Voith Company Sintaksa - A Voith Company Ulica Domovinskog rata 104C, 21 000 Split, Hrvatska	Unit KA1 control cubicle circuit diagrams	DRAWING No.:	REV No.:	= UACJA10GH100
Approved by Designer	Grga Kolić	15.6.2026.					PERU-01-19-170-31-001	02	+ UACJA10
Checked by	Antonio Aleksić	15.6.2026.				DC DISTRIBUTION 24VDC	Designer No.:	SALES No.:	PAGE 9
Drawn by	Tamara Trogrlić	15.6.2026.	PROJECT NAME	EMPLOYER	DESIGNER				PAGE 9 / 156

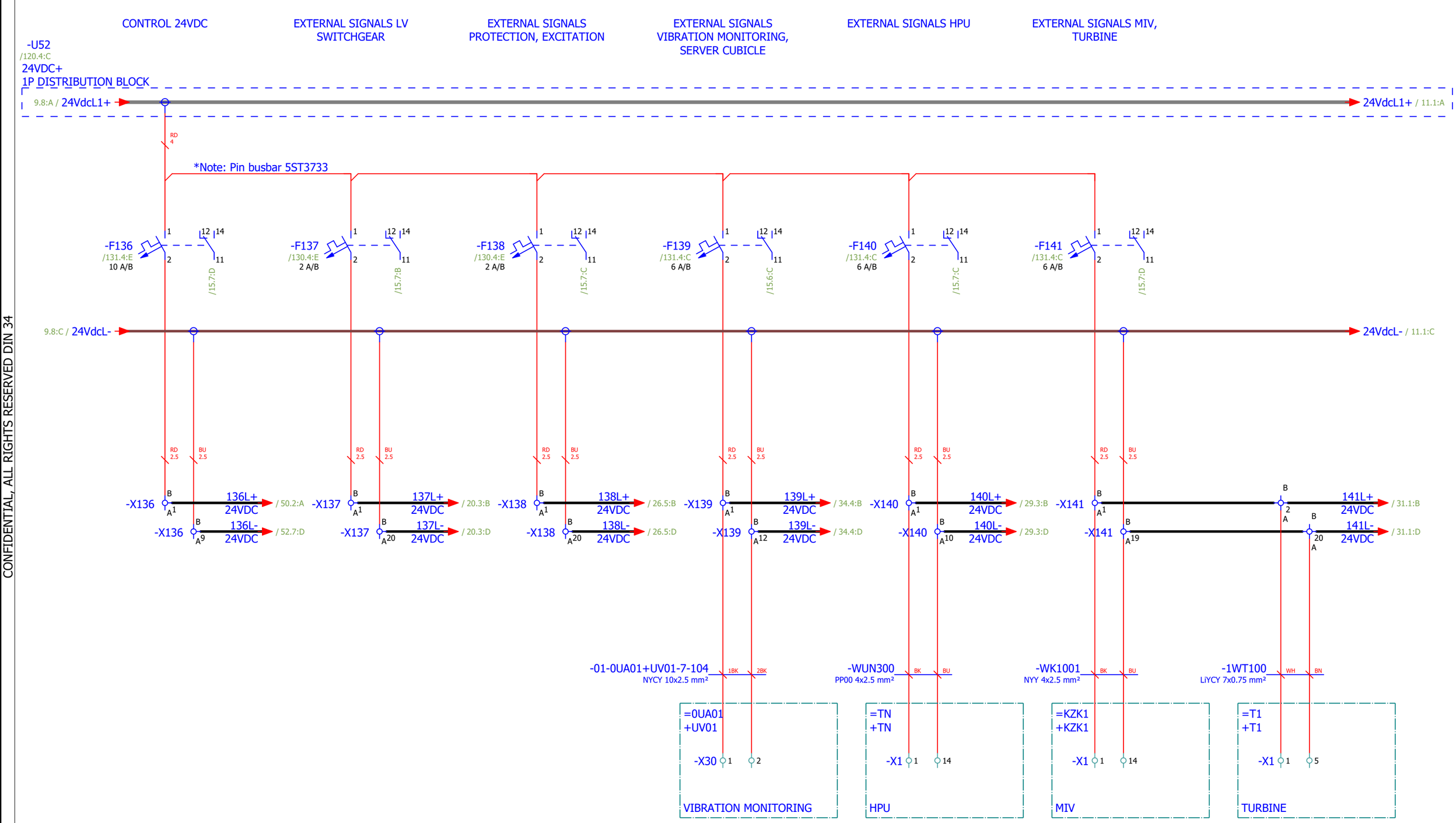

CONFIDENTIAL, ALL RIGHTS RESERVED DIN 34

Format ISO/DIN A3

Approved by Contractor			Reconstruction and Modernisation of HPP Perucica - Phase II	epcg	SINTAKSA A Voith Company	Unit KA1 control cubicle circuit diagrams	DRAWING No.:	REV No.:	= UACJA10GH100
Approved by Designer	Grga Kolić	15.6.2026.			Sintaksa - A Voith Company Ulica Domovinskog rata 104C, 21 000 Split, Hrvatska		PERU-01-19-170-31-001	02	+ UACJA10
Checked by	Antonio Aleksić	15.6.2026.				DC DISTRIBUTION 24VDC	Designer No.:	SALES No.:	PAGE 10
Drawn by	Tamara Trogrlić	15.6.2026.	PROJECT NAME	EMPLOYER	DESIGNER				PAGE 10 / 156

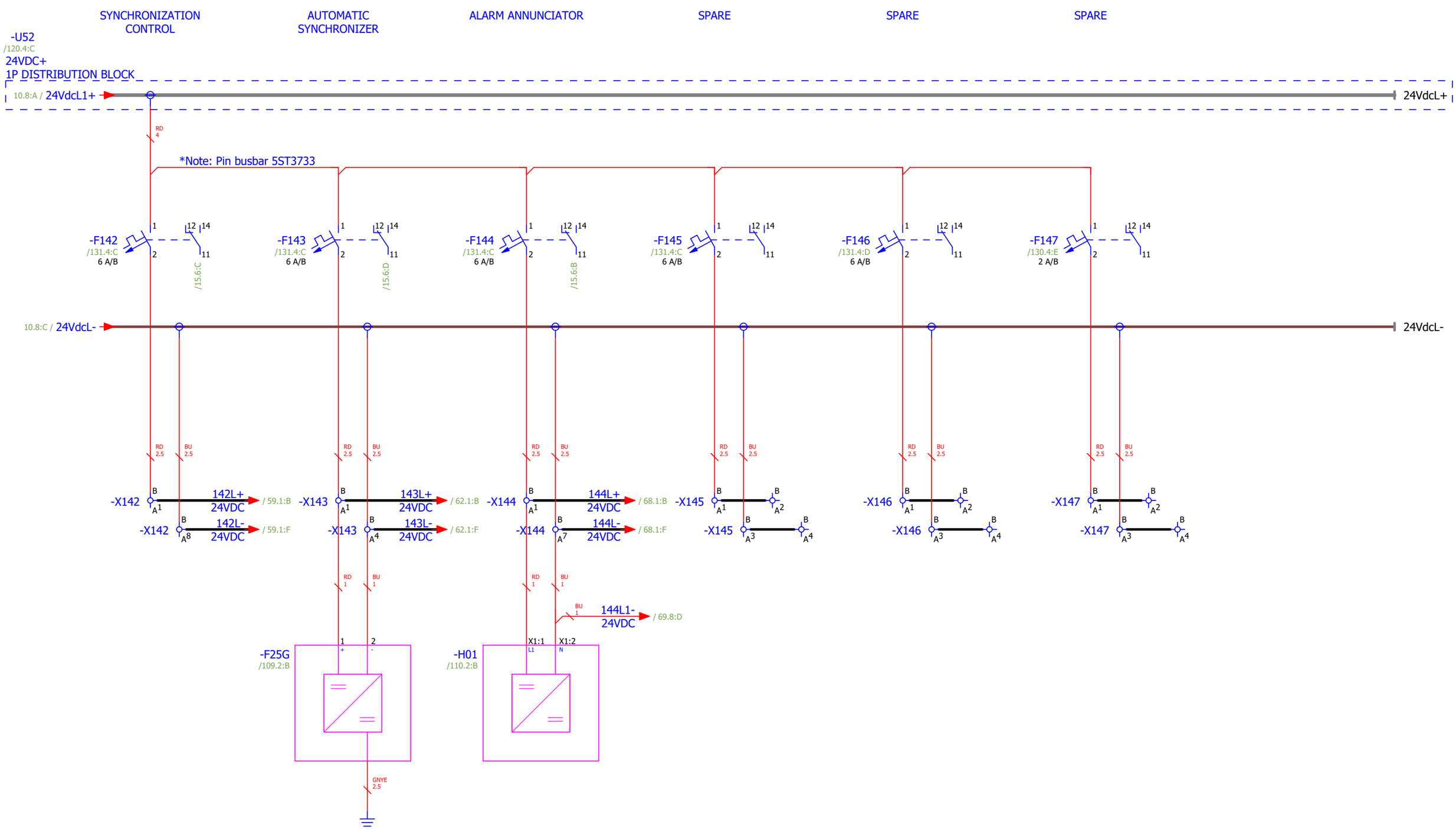

CONFIDENTIAL, ALL RIGHTS RESERVED DIN 34

Format ISO/DIN A3

Approved by Contractor			Reconstruction and Modernisation of HPP Perucica - Phase II	epcg	SINTAKSA A Voith Company	Unit KA1 control cubicle circuit diagrams	DRAWING No.:	REV No.: = UACJA10GH100
Approved by Designer	Grga Kolić	15.6.2026.			Sintaksa - A Voith Company, Ulica Domovinskog rata 104C, 21 000 Split, Hrvatska		PERU-01-19-170-31-001	02 + UACJA10
Checked by	Antonio Aleksić	15.6.2026.				DC DISTRIBUTION 24VDC	Designer No.:	SALES No.: PAGE 11
Drawn by	Tamara Trogrlić	15.6.2026.	PROJECT NAME	EMPLOYER	DESIGNER			PAGE 11 / 156

CONFIDENTIAL, ALL RIGHTS RESERVED DIN 34

Format ISO/DIN A3

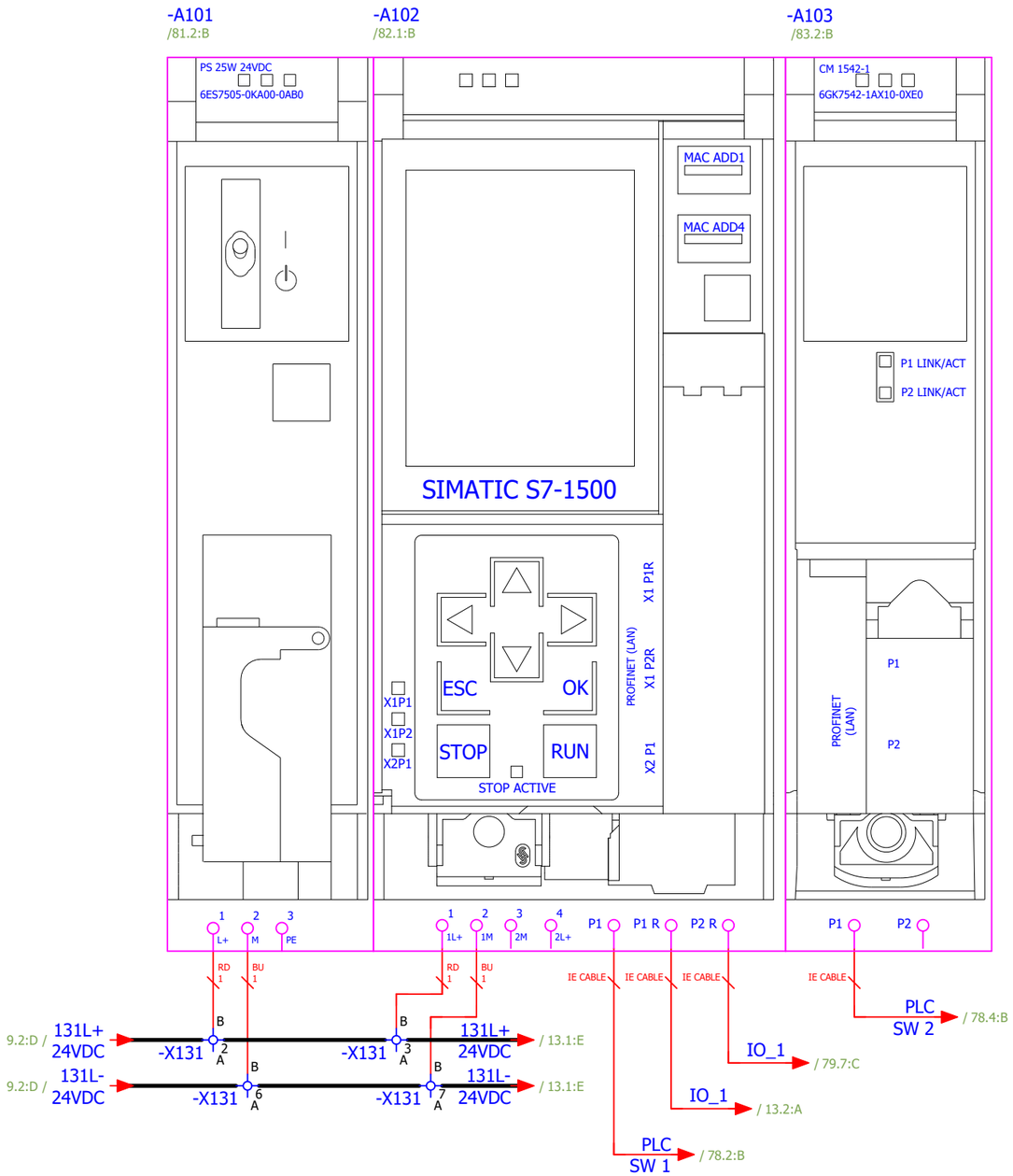

Approved by Contractor			Reconstruction and Modernisation of HPP Perucica - Phase II	epcg	SINTAKSA A Voith Company Sintaksa - A Voith Company Ulica Domovinskog rata 104C, 21 000 Split, Hrvatska	Unit KA1 control cubicle circuit diagrams	DRAWING No.:	REV No.:	= UACJA10GH100
Approved by Designer	Grga Kolić	15.6.2026.					PERU-01-19-170-31-001	02	+ UACJA10
Checked by	Antonio Aleksić	15.6.2026.				PLC CONFIGURATION	Designer No.:	SALES No.:	PAGE 12
Drawn by	Tamara Trogrlić	15.6.2026.	PROJECT NAME	EMPLOYER	DESIGNER				PAGE 12 / 156

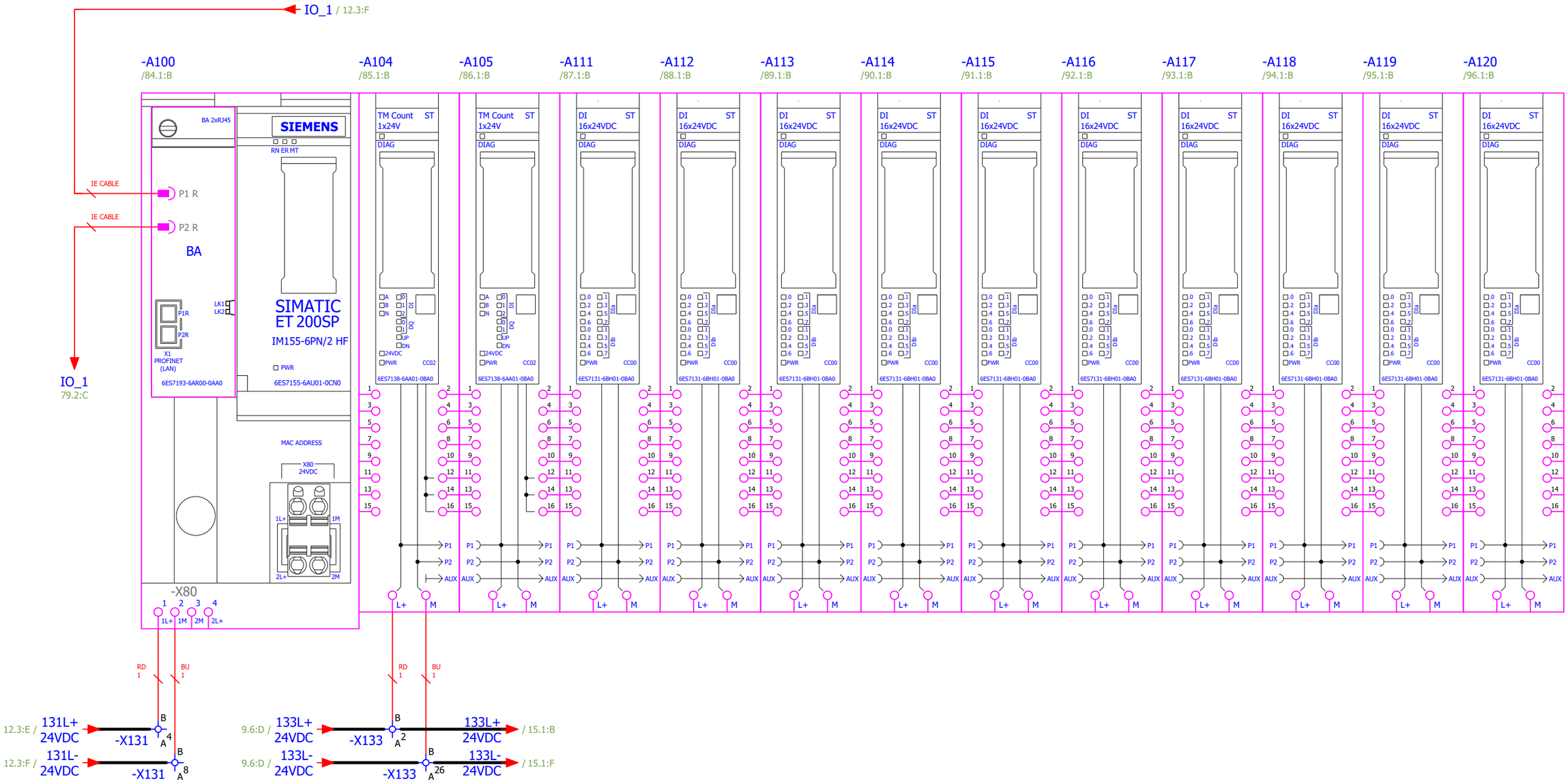

CONFIDENTIAL, ALL RIGHTS RESERVED DIN 34

Format ISO/DIN A3

Approved by Contractor			Reconstruction and Modernisation of HPP Perucica - Phase II	epcg	SINTAKSA A Voith Company Sintaksa - A Voith Company Ulica Domovinskog rata 104Ć, 21 000 Split, Hrvatska	Unit KA1 control cubicle circuit diagrams	DRAWING No.:	REV No.:	= UACJA10GH100
Approved by Designer	Grga Kolić	15.6.2026.					PERU-01-19-170-31-001	02	+ UACJA10
Checked by	Antonio Aleksić	15.6.2026.				PLC CONFIGURATION	Designer No.:	SALES No.:	PAGE 13
Drawn by	Tamara Trogrlić	15.6.2026.	PROJECT NAME	EMPLOYER	DESIGNER				PAGE 13 / 156

CONFIDENTIAL, ALL RIGHTS RESERVED DIN 34

Format ISO/DIN A3

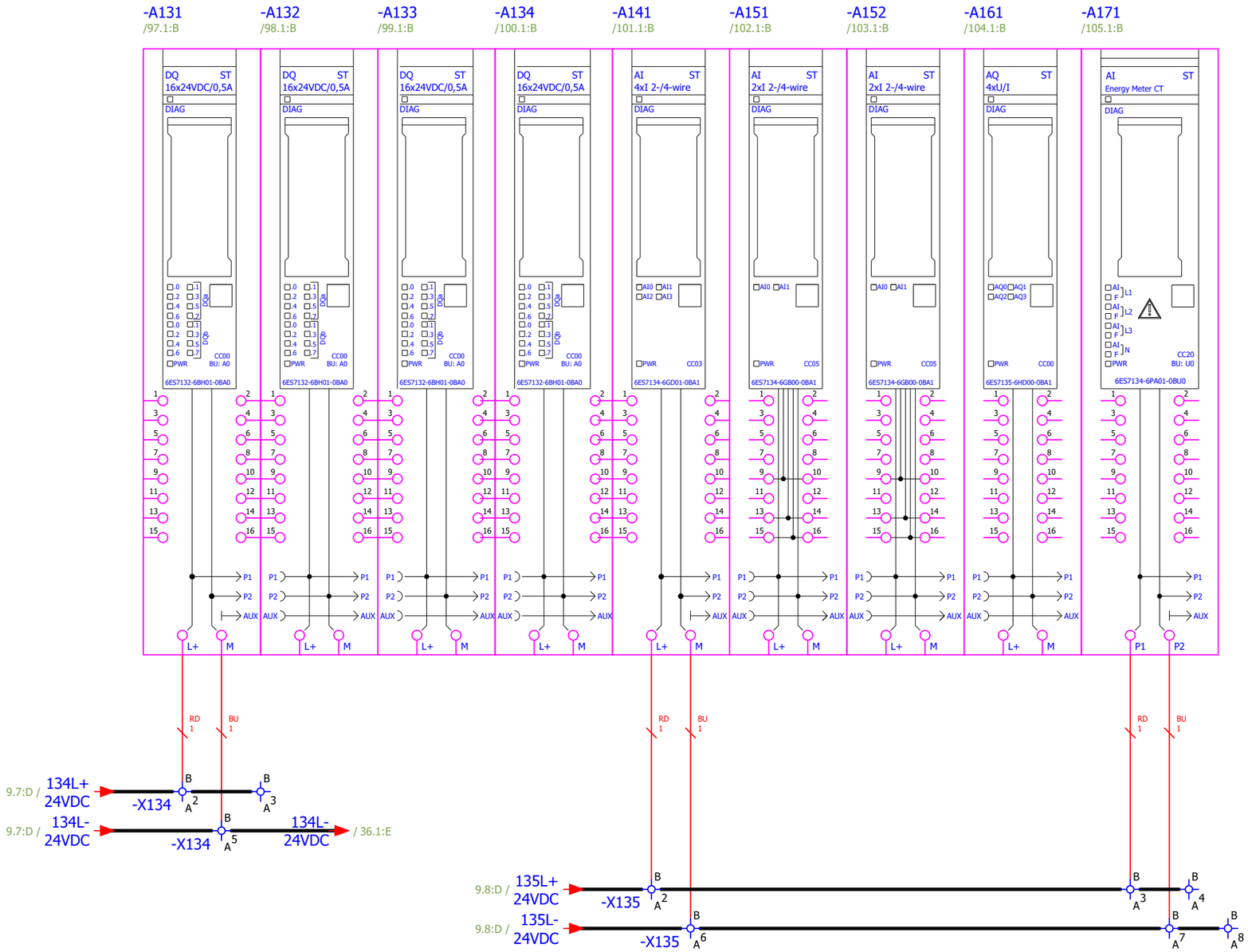

Approved by Contractor			Reconstruction and Modernisation of HPP Perucica - Phase II	epcg	SINTAKSA A Voith Company	Unit KA1 control cubicle circuit diagrams	DRAWING No.: PERU-01-19-170-31-001	REV No.: 02	= UACJA10GH100
Approved by Designer	Grga Kolić	15.6.2026.			Sintaksa - A Voith Company Ulica Domovinskog rata 104C, 21 000 Split, Hrvatska				+ UACJA10
Checked by	Antonio Aleksić	15.6.2026.				PLC CONFIGURATION	Designer No.:	SALES No.:	PAGE 14
Drawn by	Tamara Trogrlić	15.6.2026.	PROJECT NAME	EMPLOYER	DESIGNER				PAGE 14 / 156

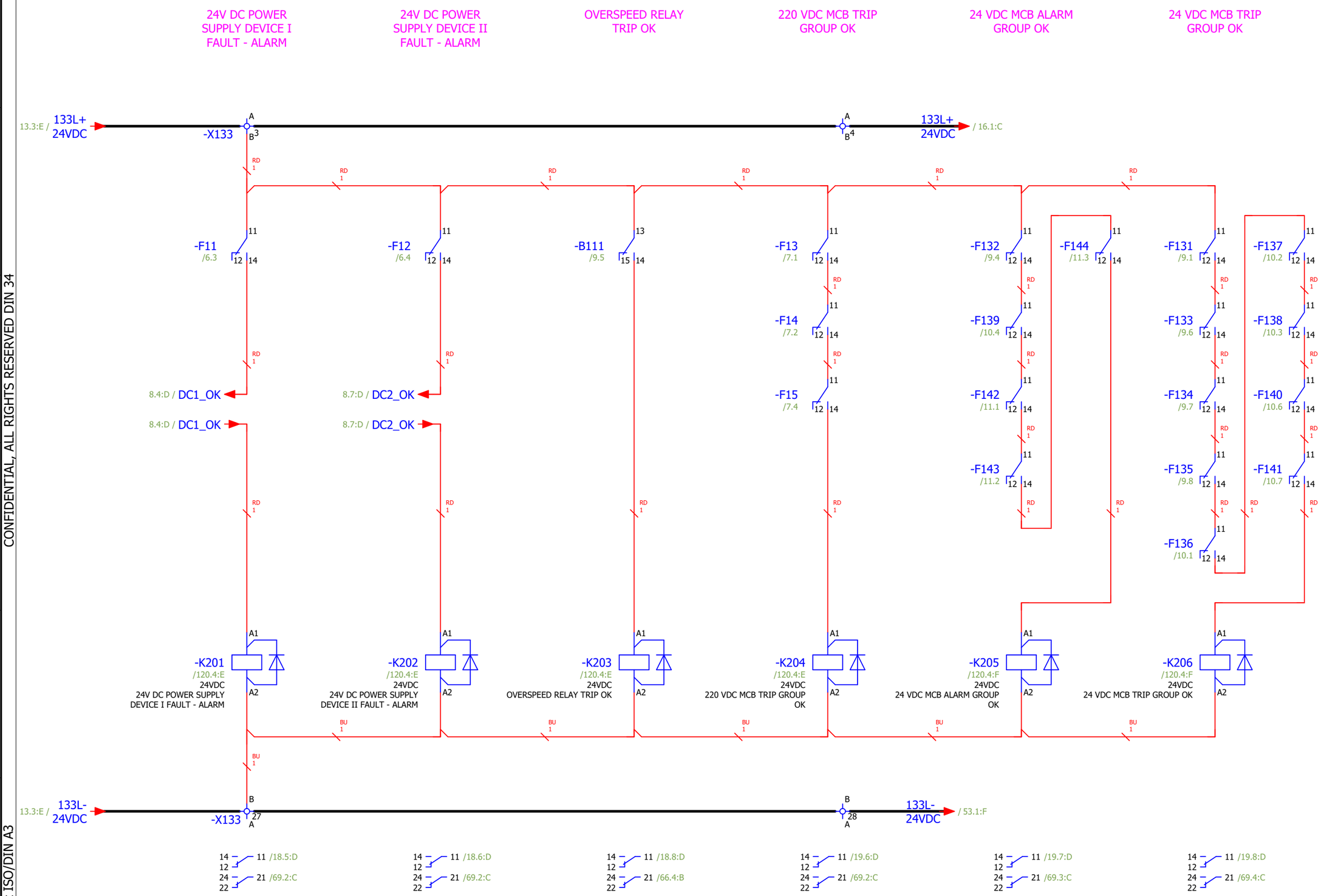

CONFIDENTIAL, ALL RIGHTS RESERVED DIN 34

Format ISO/DIN A3

Approved by Contractor			Reconstruction and Modernisation of HPP Perucica - Phase II	epcg	SINTAKSA A Voith Company	Unit KA1 control cubicle circuit diagrams	DRAWING No.: PERU-01-19-170-31-001	REV No.: 02	= UACJA10GH100
Approved by Designer	Grga Kolić	15.6.2026.			Sintaksa - A Voith Company, Ulica Domovinskog rata 104C, 21 000 Split, Hrvatska				+ UACJA10
Checked by	Antonio Aleksić	15.6.2026.				PLC DIGITAL INPUTS: INTERNAL SIGNALS	Designer No.:	SALES No.:	PAGE 15
Drawn by	Tamara Trogrlić	15.6.2026.	PROJECT NAME	EMPLOYER	DESIGNER				PAGE 15 / 156

CONFIDENTIAL, ALL RIGHTS RESERVED DIN 34

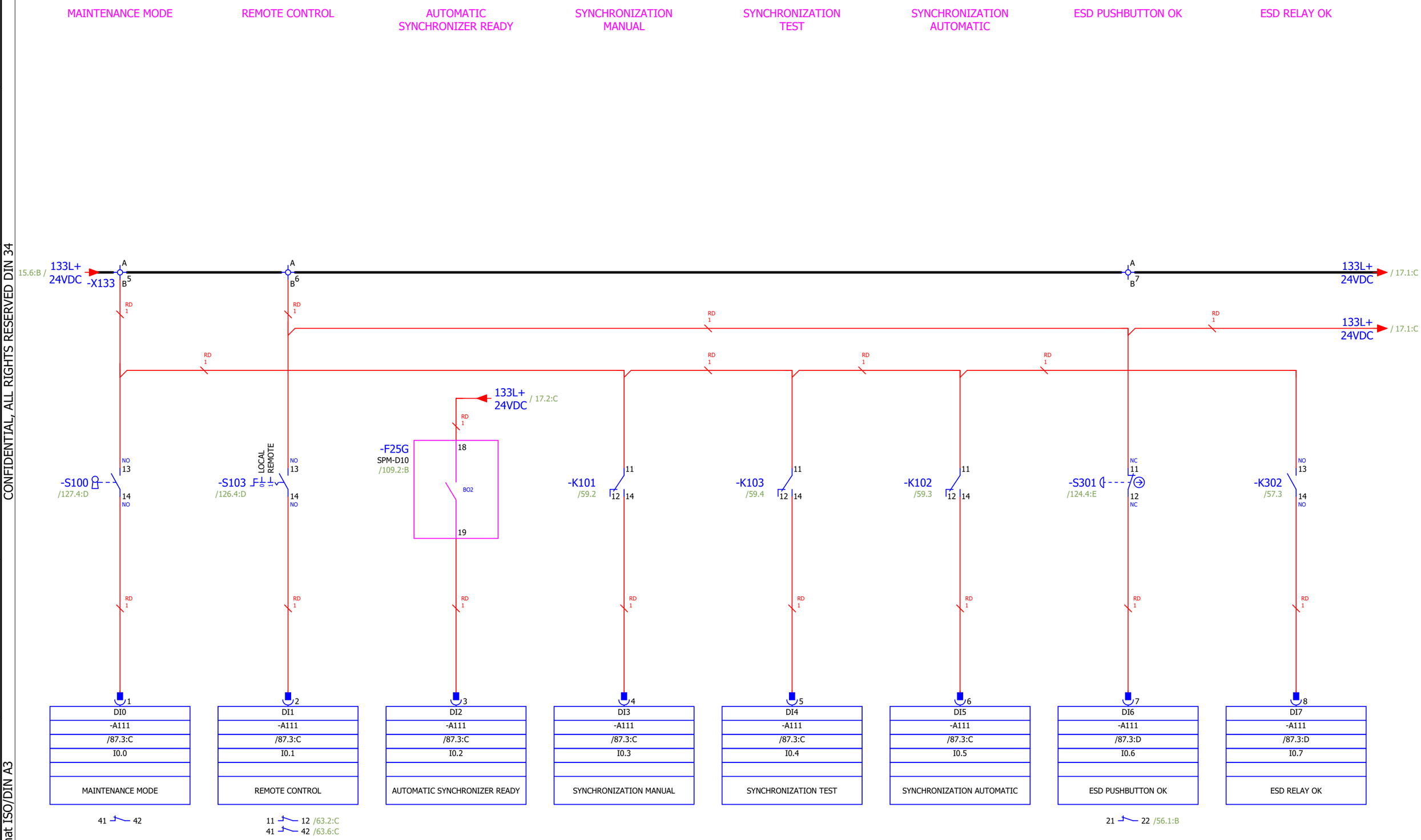

Format ISO/DIN A3

Approved by Contractor			Reconstruction and Modernisation of HPP Perucica - Phase II	epcg	SINTAKSA A Voith Company	Unit KA1 control cubicle circuit diagrams	DRAWING No.:	REV No.:	= UACJA10GH100
Approved by Designer	Grga Kolić	15.6.2026.					PERU-01-19-170-31-001	02	+ UACJA10
Checked by	Antonio Aleksić	15.6.2026.			Sintaksa - A Voith Company Ulica Domovinskog rata 104C, 21 000 Split, Hrvatska	DIGITAL INPUTS: 0.0 - 0.7	Designer No.:	SALES No.:	PAGE 16
Drawn by	Tamara Trogrlić	15.6.2026.	PROJECT NAME	EMPLOYER	DESIGNER				PAGE 16 / 156

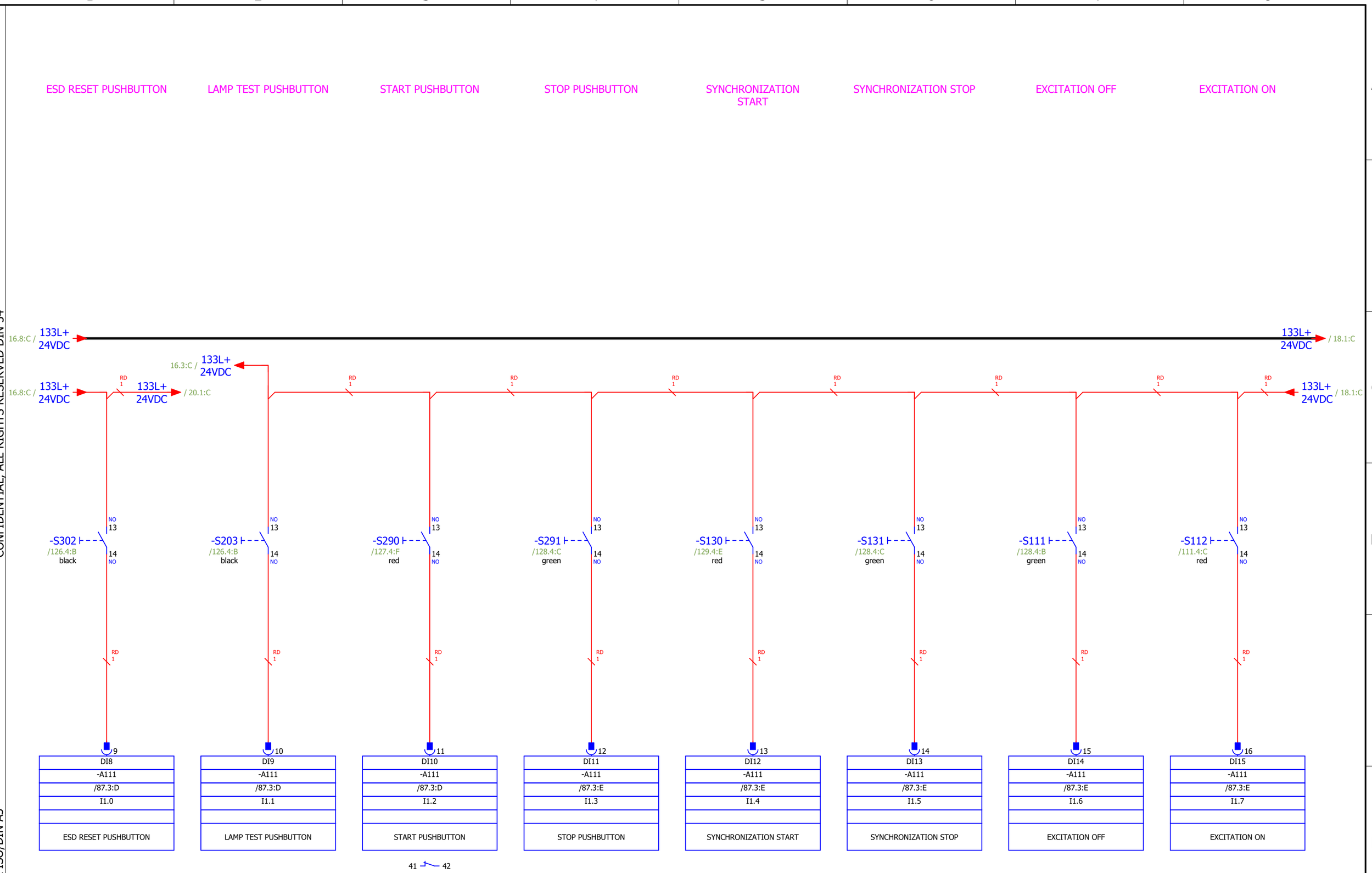

CONFIDENTIAL, ALL RIGHTS RESERVED DIN 34

Format ISO/DIN A3

Approved by Contractor			Reconstruction and Modernisation of HPP Perucica - Phase II	epcg	SINTAKSA A Voith Company Sintaksa - A Voith Company Ulica Domovinskog rata 104C, 21 000 Split, Hrvatska	Unit KA1 control cubicle circuit diagrams	DRAWING No.:	REV No.:	= UACJA10GH100
Approved by Designer	Grga Kolić	15.6.2026.					PERU-01-19-170-31-001	02	+ UACJA10
Checked by	Antonio Aleksić	15.6.2026.				DIGITAL INPUTS: 1.0 - 1.7	Designer No.:	SALES No.:	PAGE 17
Drawn by	Tamara Trogrlić	15.6.2026.	PROJECT NAME	EMPLOYER	DESIGNER				PAGE 17 / 156

CONFIDENTIAL, ALL RIGHTS RESERVED DIN 34

Format ISO/DIN A3

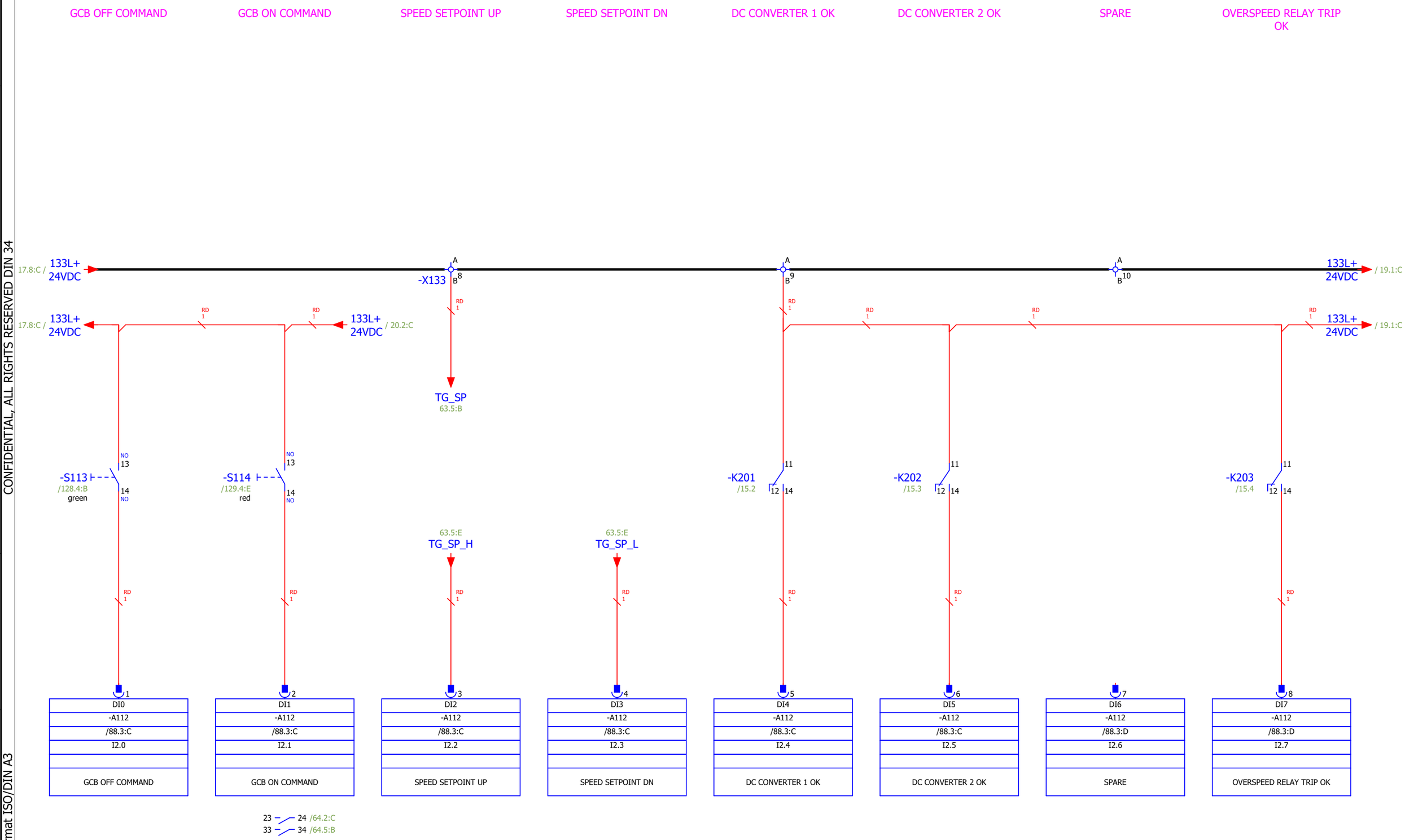

Approved by Contractor			Reconstruction and Modernisation of HPP Perucica - Phase II	epcg	SINTAKSA A Voith Company	Unit KA1 control cubicle circuit diagrams	DRAWING No.:	REV No.: = UACJA10GH100
Approved by Designer	Grga Kolić	15.6.2026.			Sintaksa - A Voith Company, Ulica Domovinskog rata 104Ç, 21 000 Split, Hrvatska		PERU-01-19-170-31-001	02 + UACJA10
Checked by	Antonio Aleksić	15.6.2026.				DIGITAL INPUTS: 2.0 - 2.7	Designer No.:	SALES No.: PAGE 18
Drawn by	Tamara Trogrlić	15.6.2026.	PROJECT NAME	EMPLOYER	DESIGNER			PAGE 18 / 156

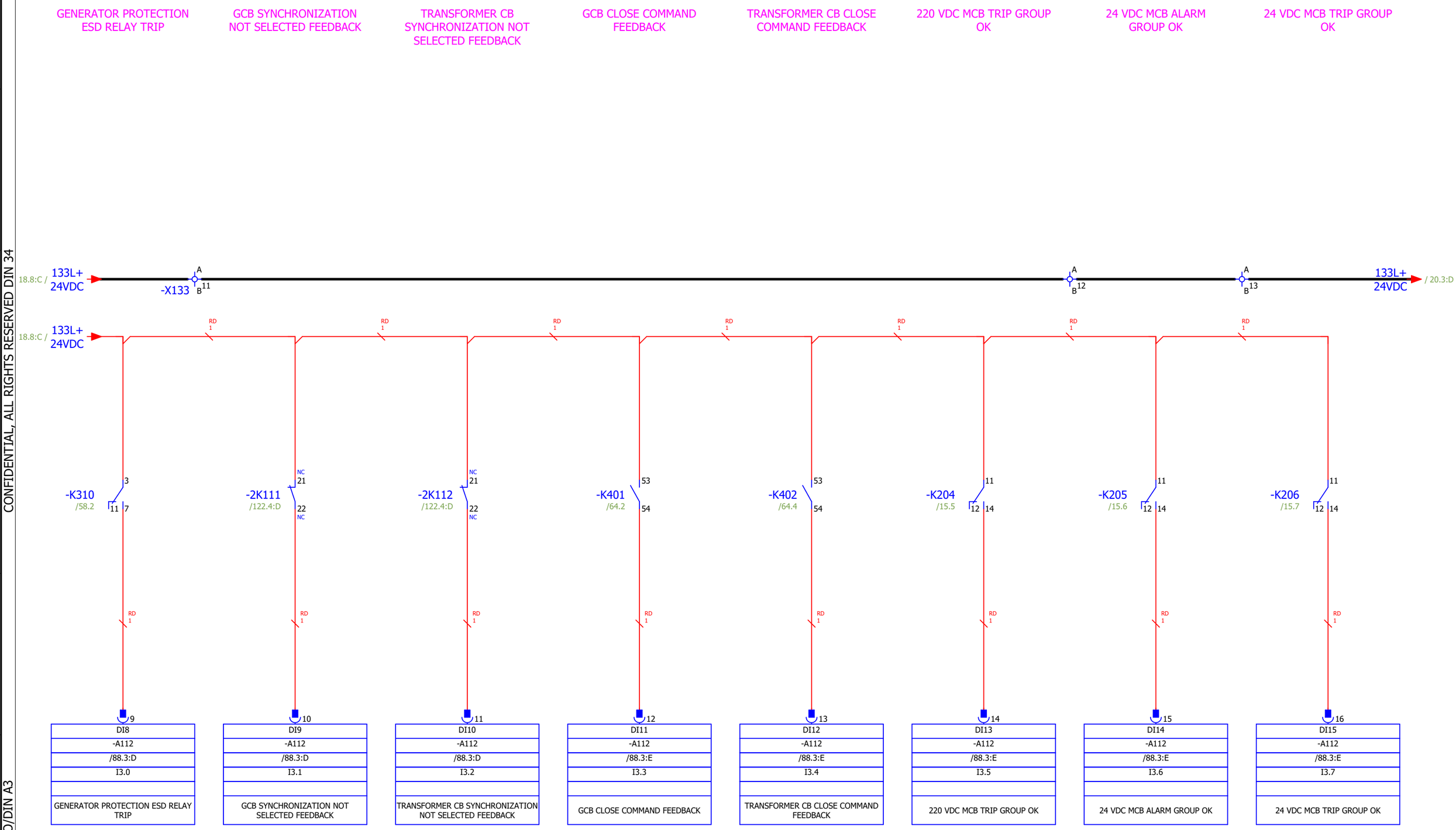

CONFIDENTIAL, ALL RIGHTS RESERVED DIN 34

Format ISO/DIN A3

Approved by Contractor			Reconstruction and Modernisation of HPP Perucica - Phase II	epcg	SINTAKSA A Voith Company Sintaksa - A Voith Company Ulica Domovinskog rata 104Ç, 21 000 Split, Hrvatska	Unit KA1 control cubicle circuit diagrams	DRAWING No.: PERU-01-19-170-31-001	REV No.: 02	= UACJA10GH100
Approved by Designer	Grga Kolić	15.6.2026.							+ UACJA10
Checked by	Antonio Aleksić	15.6.2026.				DIGITAL INPUTS: 3.0 - 3.7	Designer No.:	SALES No.:	PAGE 19
Drawn by	Tamara Trogrlić	15.6.2026.	PROJECT NAME	EMPLOYER	DESIGNER				PAGE 19 / 156

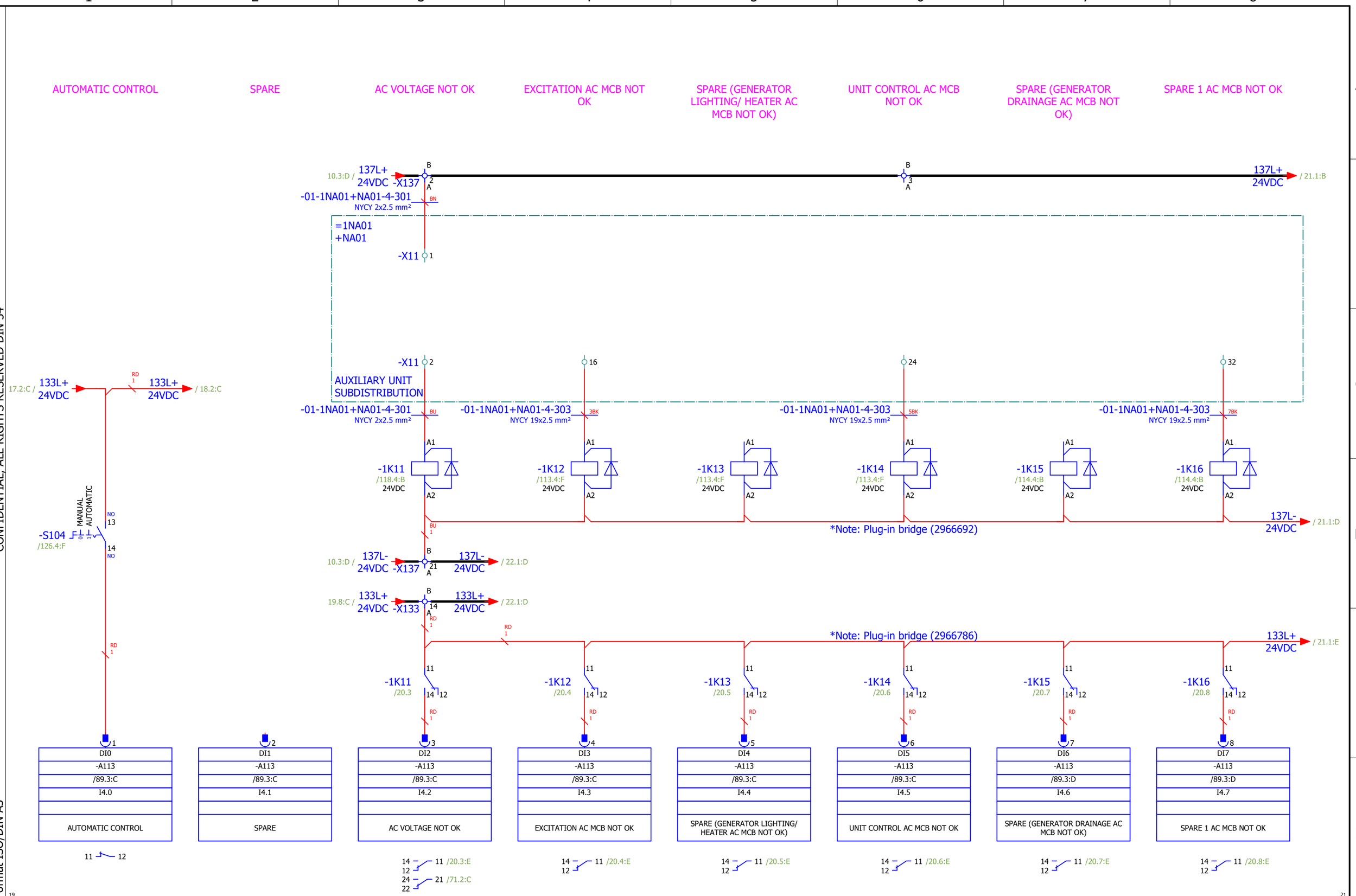

CONFIDENTIAL, ALL RIGHTS RESERVED DIN 34

Format ISO/DIN A3

Approved by Contractor			Reconstruction and Modernisation of HPP Perucica - Phase II	epcg	SINTAKSA A Voith Company Sintaksa - A Voith Company Ulica Domovinskog rata 104C, 21 000 Split, Hrvatska	Unit KA1 control cubicle circuit diagrams	DRAWING No.:	REV No.:	= UACJA10GH100
Approved by Designer	Grga Kolić	15.6.2026.					PERU-01-19-170-31-001	02	+ UACJA10
Checked by	Antonio Aleksić	15.6.2026.				DIGITAL INPUTS: 4.0 - 4.7	Designer No.:	SALES No.:	PAGE 20
Drawn by	Tamara Trogrlić	15.6.2026.	PROJECT NAME	EMPLOYER	DESIGNER				PAGE 20 / 156

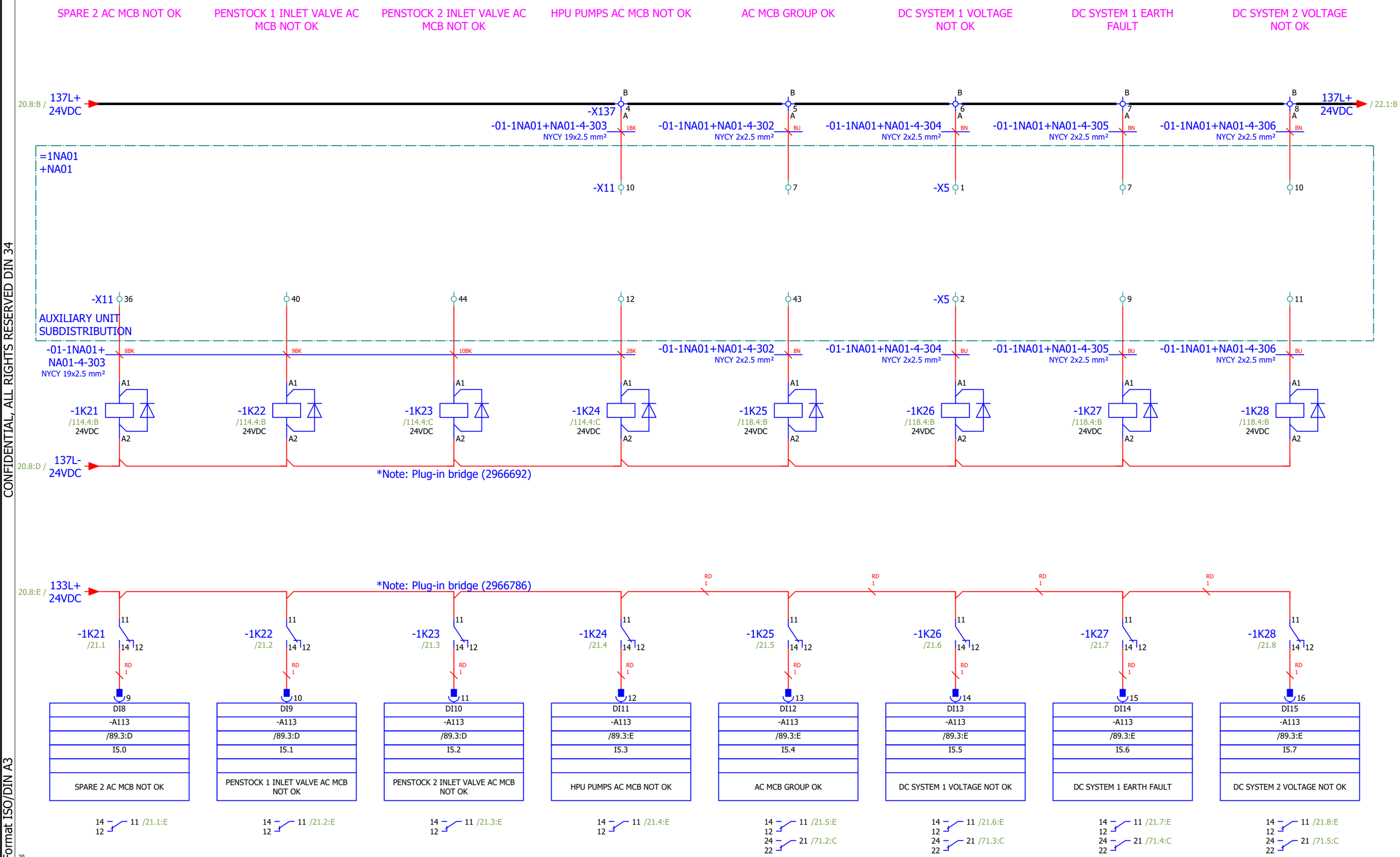

CONFIDENTIAL, ALL RIGHTS RESERVED DIN 34

Format ISO/DIN A3

Approved by Contractor			Reconstruction and Modernisation of HPP Perucica - Phase II	epcg	SINTAKSA A Voith Company Sintaksa - A Voith Company Ulica Domovinskog rata 104C, 21 000 Split, Hrvatska	Unit KA1 control cubicle circuit diagrams DIGITAL INPUTS: 5.0 - 5.7	DRAWING No.: PERU-01-19-170-31-001	REV No.: 02	= UACJA10GH100
Approved by Designer	Grga Kolić	15.6.2026.							+ UACJA10
Checked by	Antonio Aleksić	15.6.2026.					Designer No.:	SALES No.:	PAGE 21
Drawn by	Tamara Trogrlić	15.6.2026.	PROJECT NAME	EMPLOYER	DESIGNER				PAGE 21 / 156

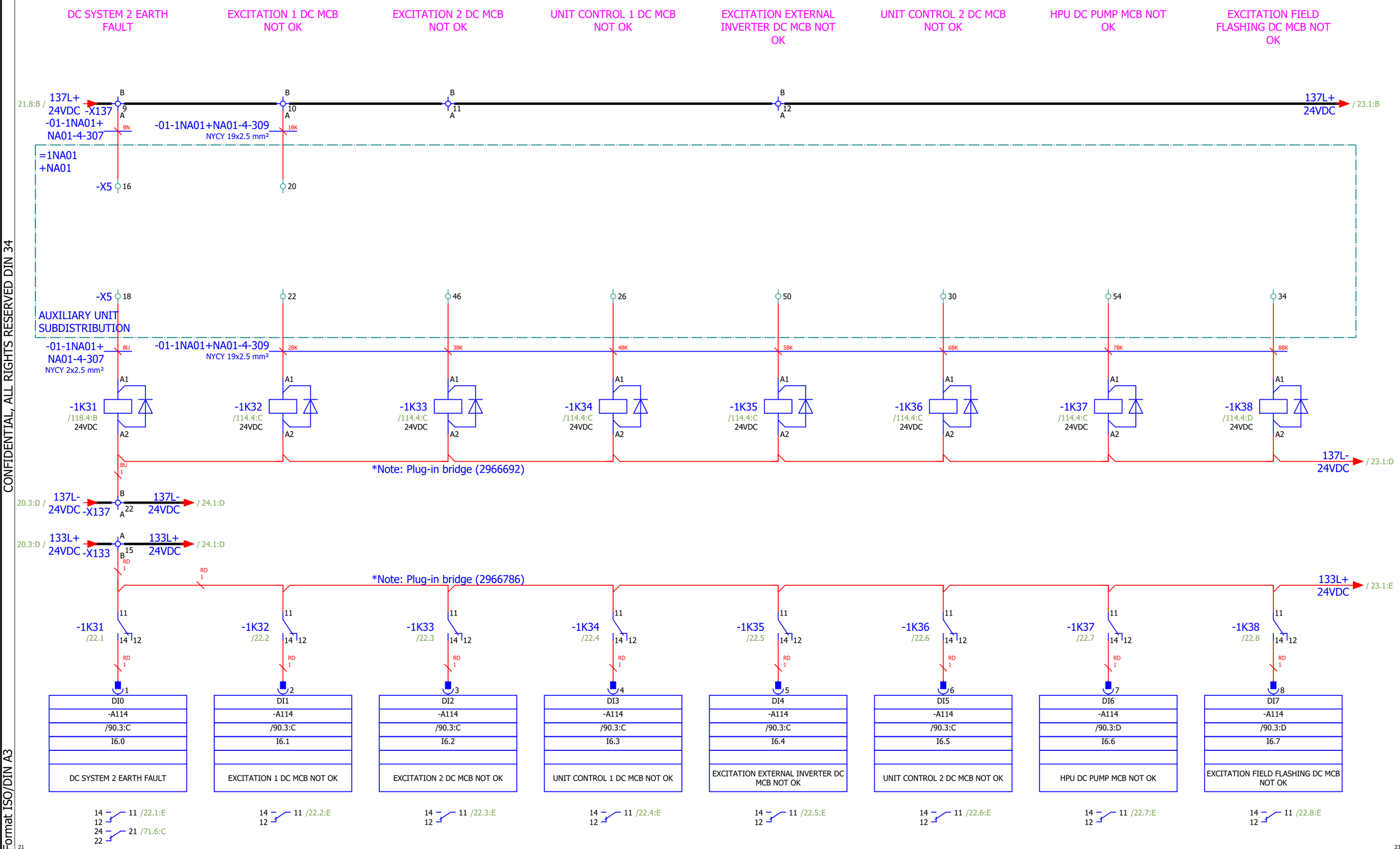

CONFIDENTIAL, ALL RIGHTS RESERVED DIN 34

Format ISO/DIN A3

Approved by Contractor			Reconstruction and Modernisation of HPP Perucica - Phase II	epcg	SINTAKSA A Voith Company	Unit KA1 control cubicle circuit diagrams	DRAWING No.:	REV No.:	= UACJA10GH100
Approved by Designer	Grga Kolić	15.6.2026.			Sintaksa - A Voith Company Ulica Domovinskog rata 104C, 21 000 Split, Hrvatska		PERU-01-19-170-31-001	02	+ UACJA10
Checked by	Antonio Aleksić	15.6.2026.				DIGITAL INPUTS: 6.0 - 6.7	Designer No.:	SALES No.:	PAGE 22
Drawn by	Tamara Trogrlić	15.6.2026.	PROJECT NAME	EMPLOYER	DESIGNER				PAGE 22 / 156

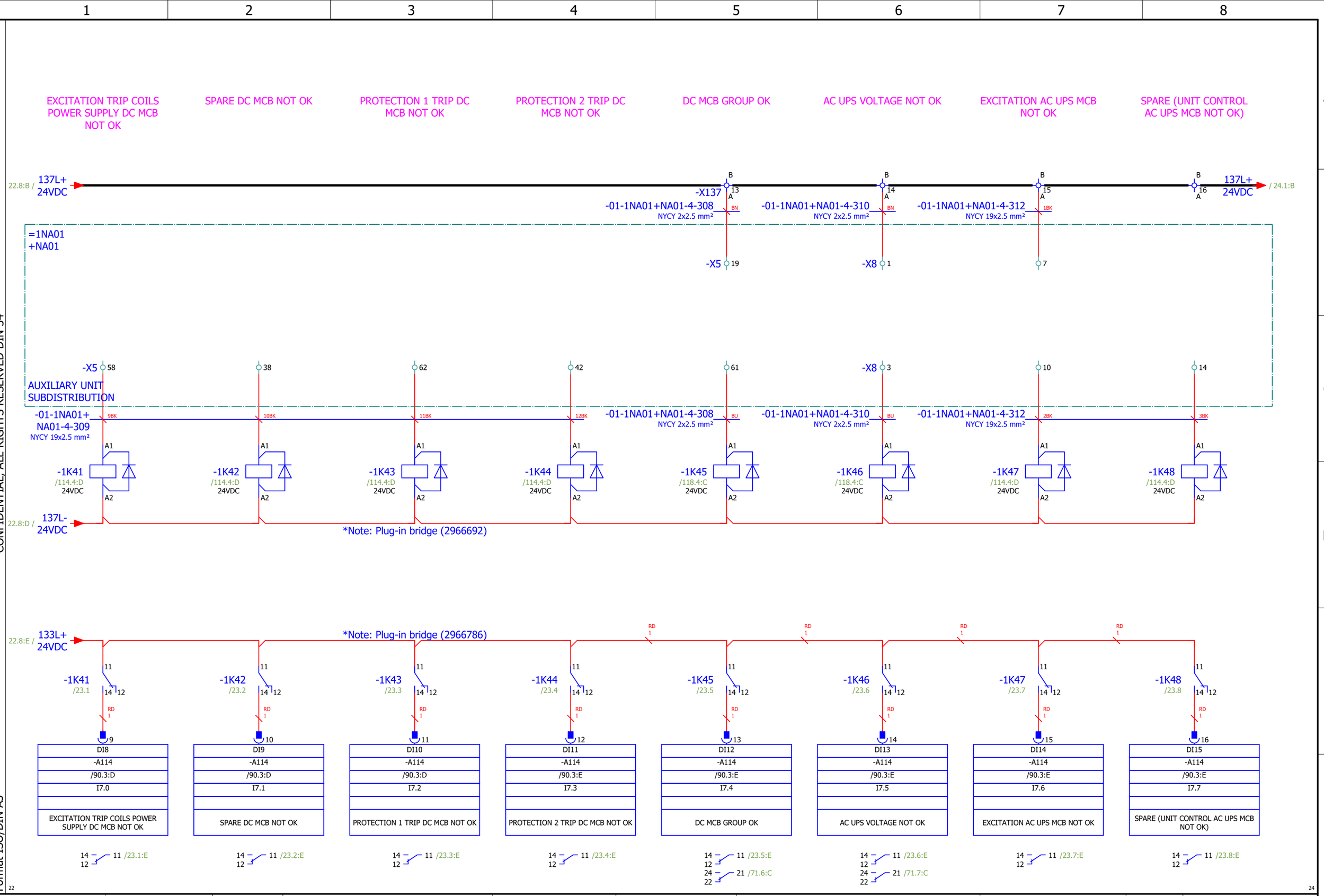

CONFIDENTIAL, ALL RIGHTS RESERVED DIN 34

Format ISO/DIN A3

Approved by Contractor			Reconstruction and Modernisation of HPP Perucica - Phase II	epcg	SINTAKSA A Voith Company	Unit KA1 control cubicle circuit diagrams	DRAWING No.: PERU-01-19-170-31-001	REV No.: 02	= UACJA10GH100
Approved by Designer	Grga Kolić	15.6.2026.			Sintaksa - A Voith Company, Ulica Domovinskog rata 104C, 21 000 Split, Hrvatska				+ UACJA10
Checked by	Antonio Aleksić	15.6.2026.				DIGITAL INPUTS: 7.0 - 7.7	Designer No.:	SALES No.:	PAGE 23
Drawn by	Tamara Trogrlić	15.6.2026.	PROJECT NAME	EMPLOYER	DESIGNER				PAGE 23 / 156

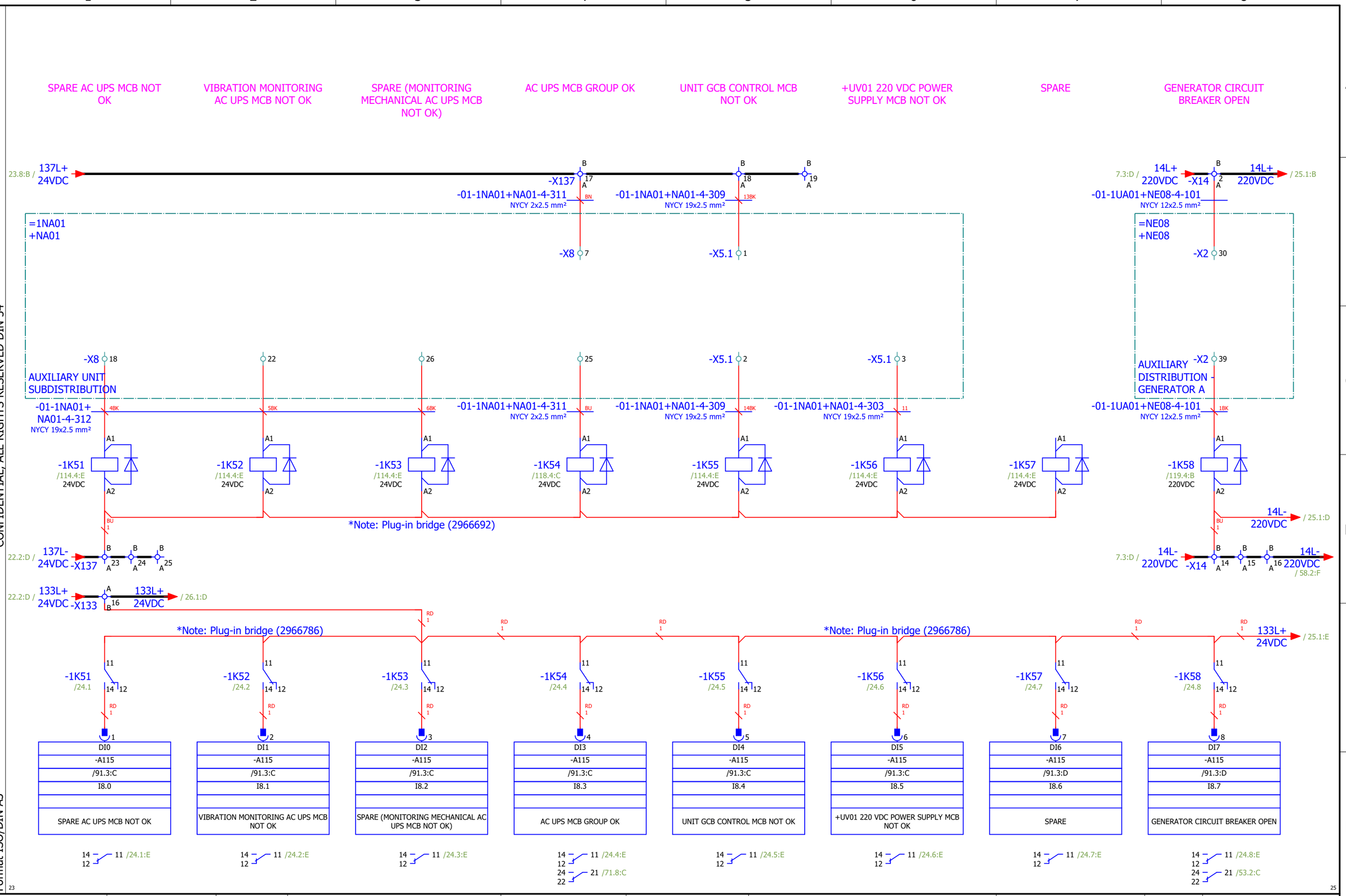

CONFIDENTIAL, ALL RIGHTS RESERVED DIN 34

Format ISO/DIN A3

Approved by Contractor			Reconstruction and Modernisation of HPP Perucica - Phase II	epcg	SINTAKSA A Voith Company Sintaksa - A Voith Company Ulica Domovinskog rata 104C, 21 000 Split, Hrvatska	Unit KA1 control cubicle circuit diagrams DIGITAL INPUTS: 8.0 - 8.7	DRAWING No.: PERU-01-19-170-31-001	REV No.: 02	= UACJA10GH100 + UACJA10
Approved by Designer	Grga Kolić	15.6.2026.					Designer No.:	SALES No.:	PAGE 24
Checked by	Antonio Aleksić	15.6.2026.							PAGE 24 / 156
Drawn by	Tamara Trogrlić	15.6.2026.	PROJECT NAME	EMPLOYER	DESIGNER				

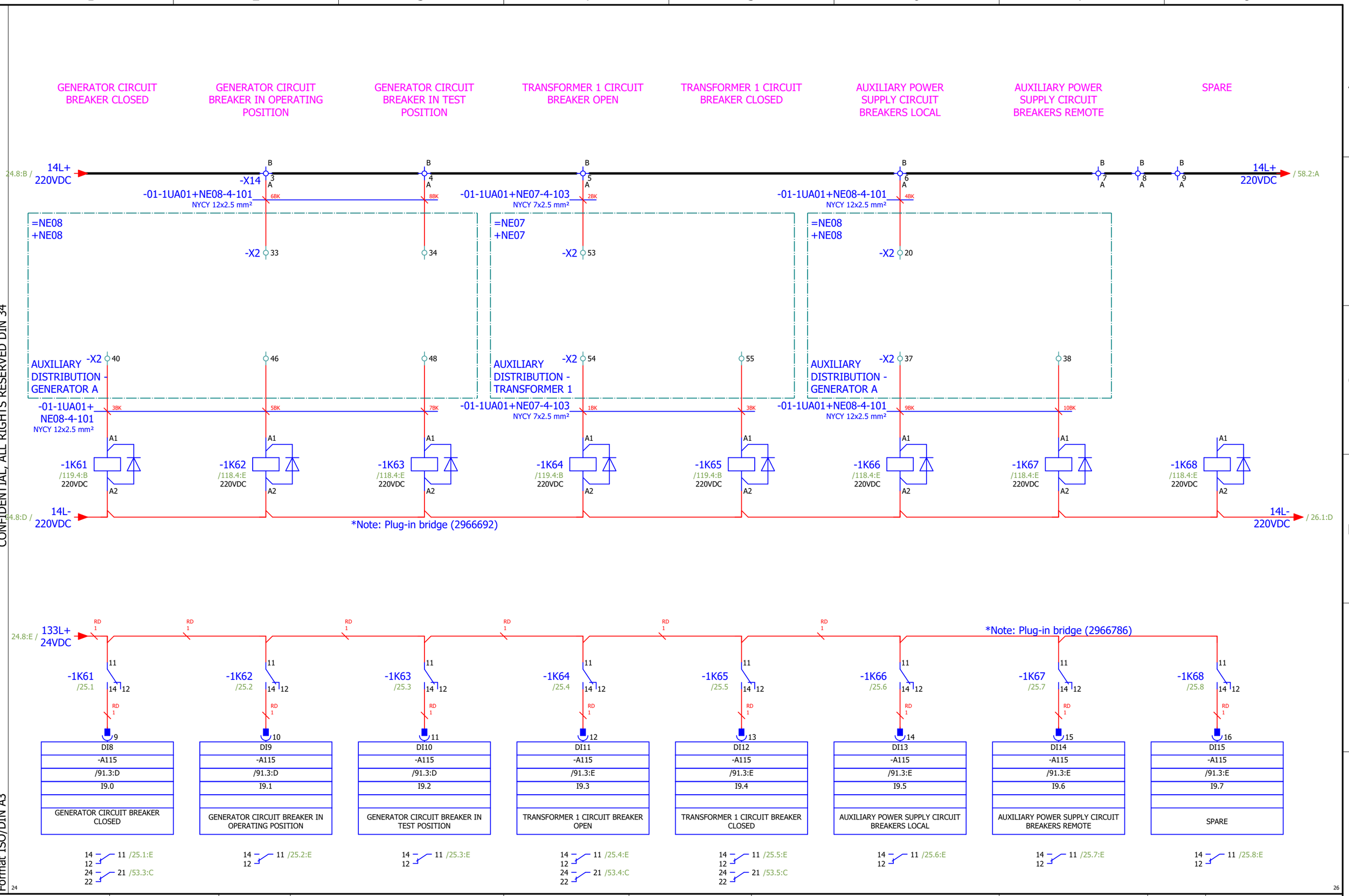

CONFIDENTIAL, ALL RIGHTS RESERVED DIN 34

Format ISO/DIN A3

Approved by Contractor			Reconstruction and Modernisation of HPP Perucica - Phase II	epcg	SINTAKSA A Voith Company Sintaksa - A Voith Company Ulica Domovinskog rata 104C, 21 000 Split, Hrvatska	Unit KA1 control cubicle circuit diagrams DIGITAL INPUTS: 9.0 - 9.7	DRAWING No.: PERU-01-19-170-31-001	REV No.: 02	= UACJA10GH100
Approved by Designer	Grga Kolić	15.6.2026.							+ UACJA10
Checked by	Antonio Aleksić	15.6.2026.					Designer No.:	SALES No.:	PAGE 25
Drawn by	Tamara Trogrlić	15.6.2026.	PROJECT NAME	EMPLOYER	DESIGNER				PAGE 25 / 156

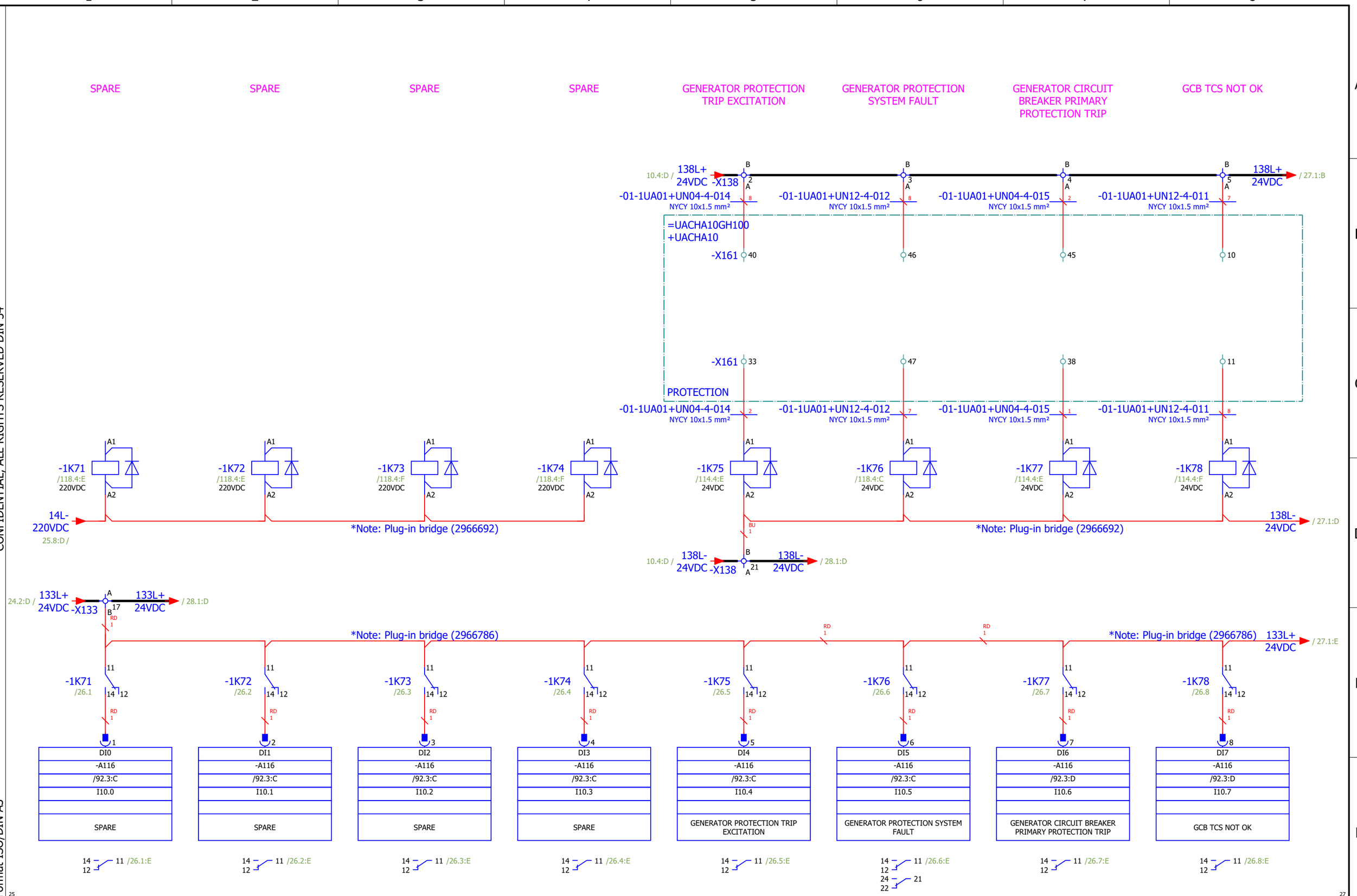

CONFIDENTIAL, ALL RIGHTS RESERVED DIN 34

Format ISO/DIN A3

Approved by Contractor			Reconstruction and Modernisation of HPP Perucica - Phase II	epcg	SINTAKSA A Voith Company Sintaksa - A Voith Company Ulica Domovinskog rata 104C, 21 000 Split, Hrvatska	Unit KA1 control cubicle circuit diagrams DIGITAL INPUTS: 10.0 - 10.7	DRAWING No.: PERU-01-19-170-31-001	REV No.: 02	= UACJA10GH100 + UACJA10
Approved by Designer	Grga Kolić	15.6.2026.					Designer No.:	SALES No.:	PAGE 26
Checked by	Antonio Aleksić	15.6.2026.							PAGE 26 / 156
Drawn by	Tamara Trogrlić	15.6.2026.	PROJECT NAME	EMPLOYER	DESIGNER				

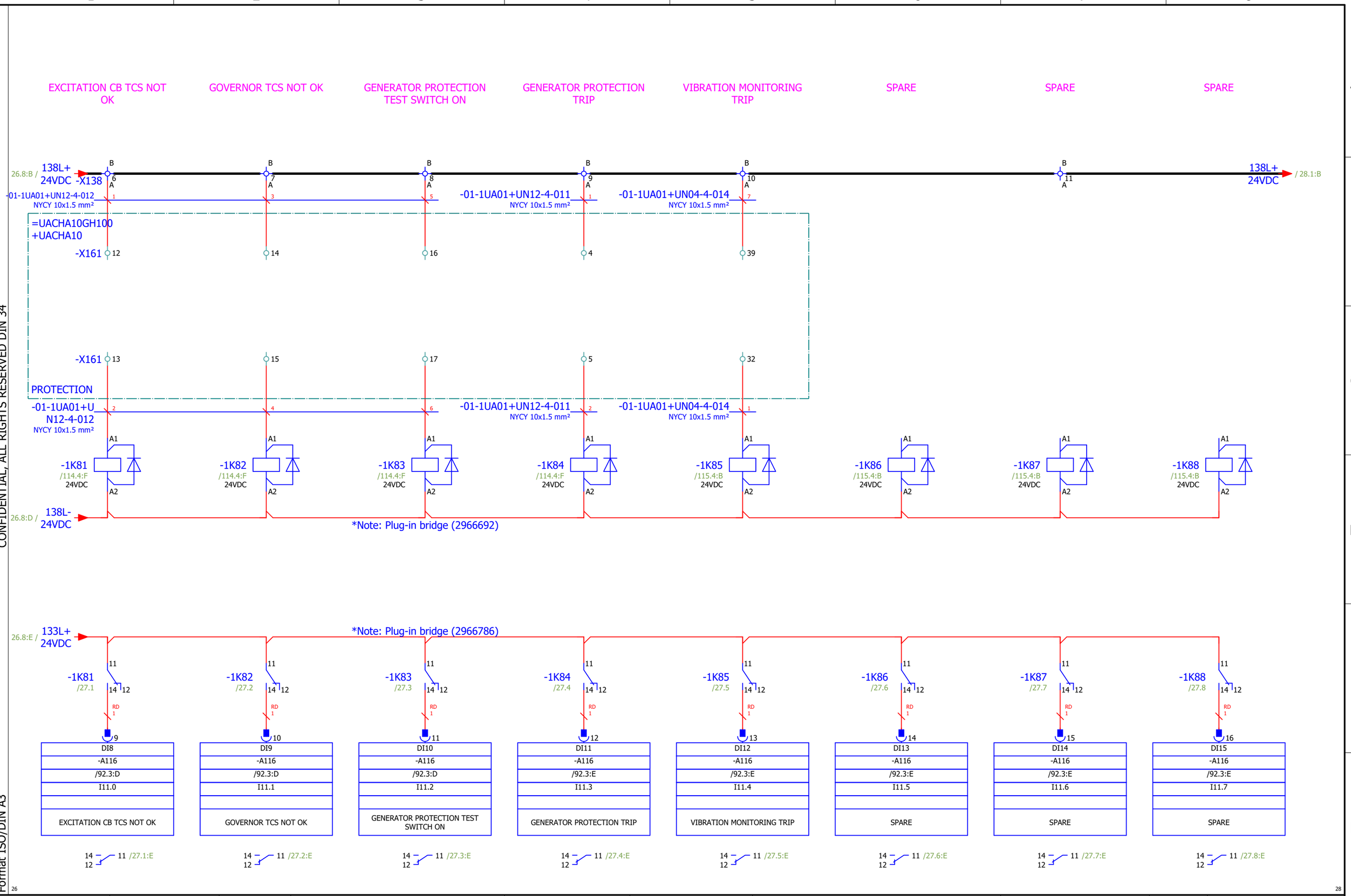

CONFIDENTIAL, ALL RIGHTS RESERVED DIN 34

Format ISO/DIN A3

Approved by Contractor			Reconstruction and Modernisation of HPP Perucica - Phase II	epcg	SINTAKSA A Voith Company	Unit KA1 control cubicle circuit diagrams	DRAWING No.: PERU-01-19-170-31-001	REV No.: 02	= UACJA10GH100
Approved by Designer	Grga Kolić	15.6.2026.			Sintaksa - A Voith Company Ulica Domovinskog rata 104C, 21 000 Split, Hrvatska				+ UACJA10
Checked by	Antonio Aleksić	15.6.2026.				DIGITAL INPUTS: 11.0 - 11.7	Designer No.:	SALES No.:	PAGE 27
Drawn by	Tamara Trogrlić	15.6.2026.	PROJECT NAME	EMPLOYER	DESIGNER				PAGE 27 / 156

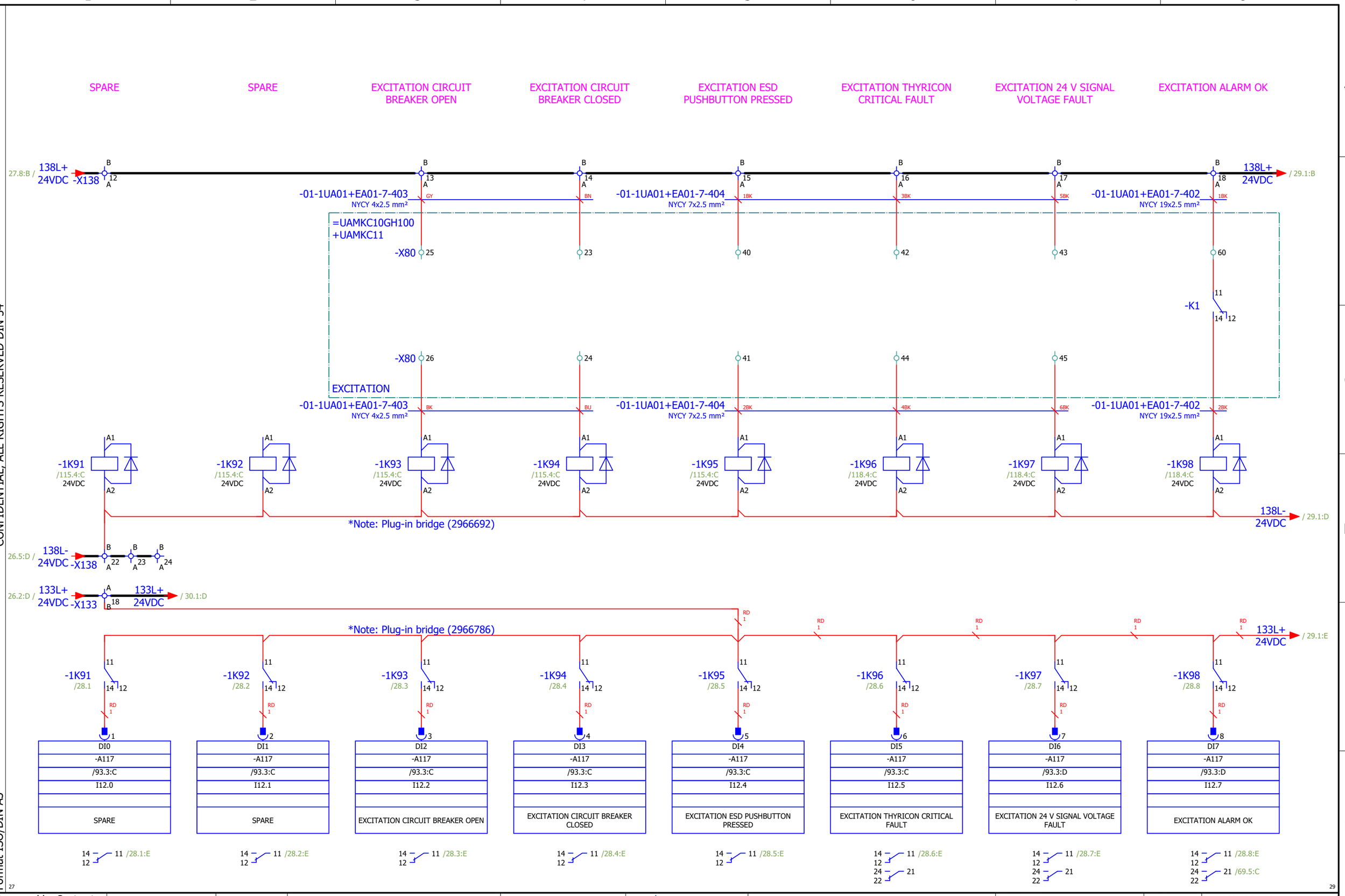

CONFIDENTIAL, ALL RIGHTS RESERVED DIN 34

Format ISO/DIN A3

Approved by Contractor			Reconstruction and Modernisation of HPP Perucica - Phase II	epcg	SINTAKSA A Voith Company	Unit KA1 control cubicle circuit diagrams	DRAWING No.: PERU-01-19-170-31-001	REV No.: 02	= UACJA10GH100
Approved by Designer	Grga Kolić	15.6.2026.			Sintaksa - A Voith Company, Ulica Domovinskog rata 104C, 21 000 Split, Hrvatska				+ UACJA10
Checked by	Antonio Aleksić	15.6.2026.				DIGITAL INPUTS: 12.0 - 12.7	Designer No.:	SALES No.:	PAGE 28
Drawn by	Tamara Trogrlić	15.6.2026.	PROJECT NAME	EMPLOYER	DESIGNER				PAGE 28 / 156

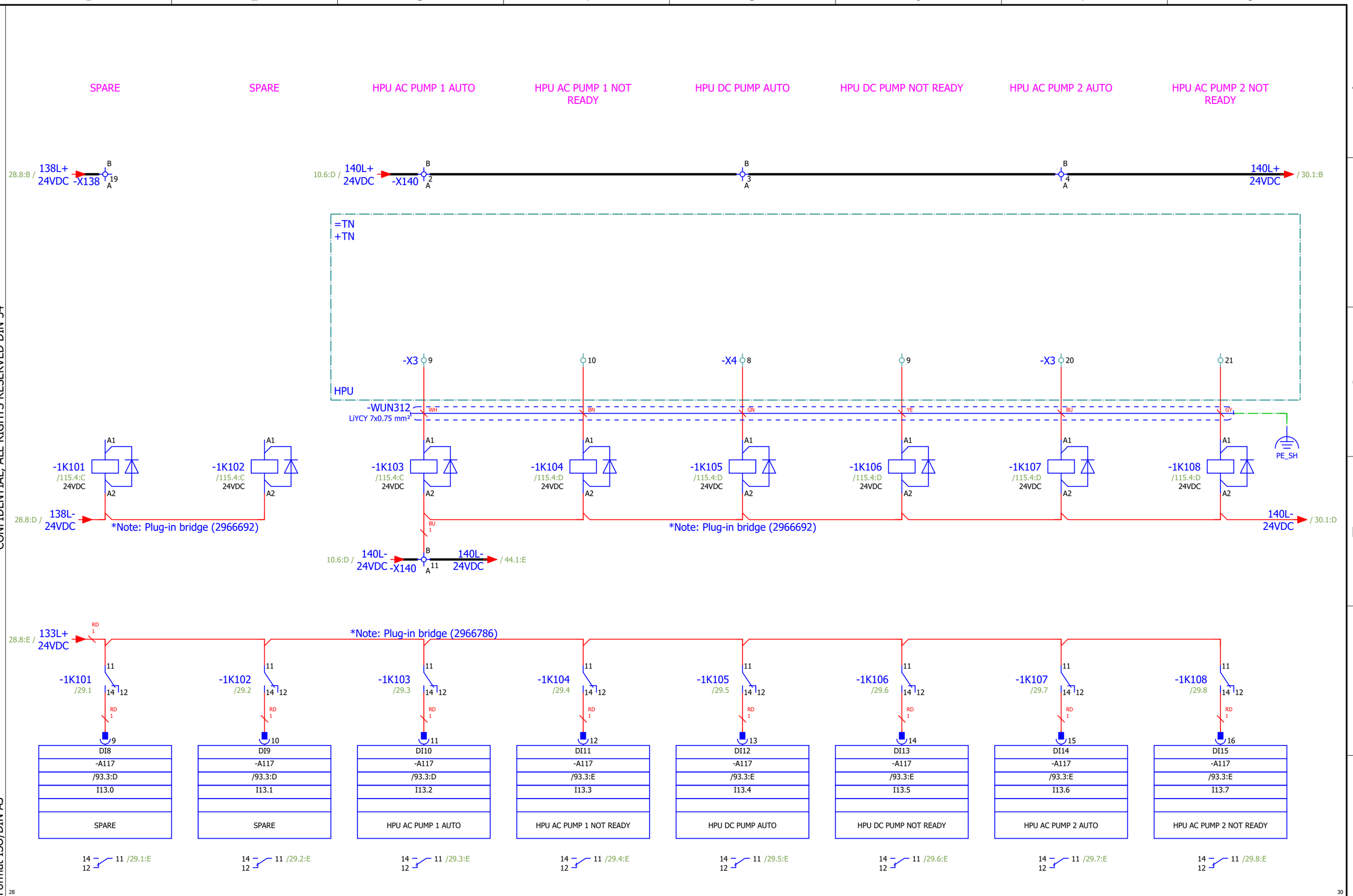

CONFIDENTIAL, ALL RIGHTS RESERVED DIN 34

Format ISO/DIN A3

Approved by Contractor			Reconstruction and Modernisation of HPP Perucica - Phase II	epcg	SINTAKSA A Voith Company	Unit KA1 control cubicle circuit diagrams	DRAWING No.: PERU-01-19-170-31-001	REV No.: 02	= UACJA10GH100
Approved by Designer	Grga Kolić	15.6.2026.			Sintaksa - A Voith Company Ulica Domovinskog rata 104C, 21 000 Split, Hrvatska				+ UACJA10
Checked by	Antonio Aleksić	15.6.2026.				DIGITAL INPUTS: 13.0 - 13.7	Designer No.:	SALES No.:	PAGE 29
Drawn by	Tamara Trogrlić	15.6.2026.	PROJECT NAME	EMPLOYER	DESIGNER				PAGE 29 / 156

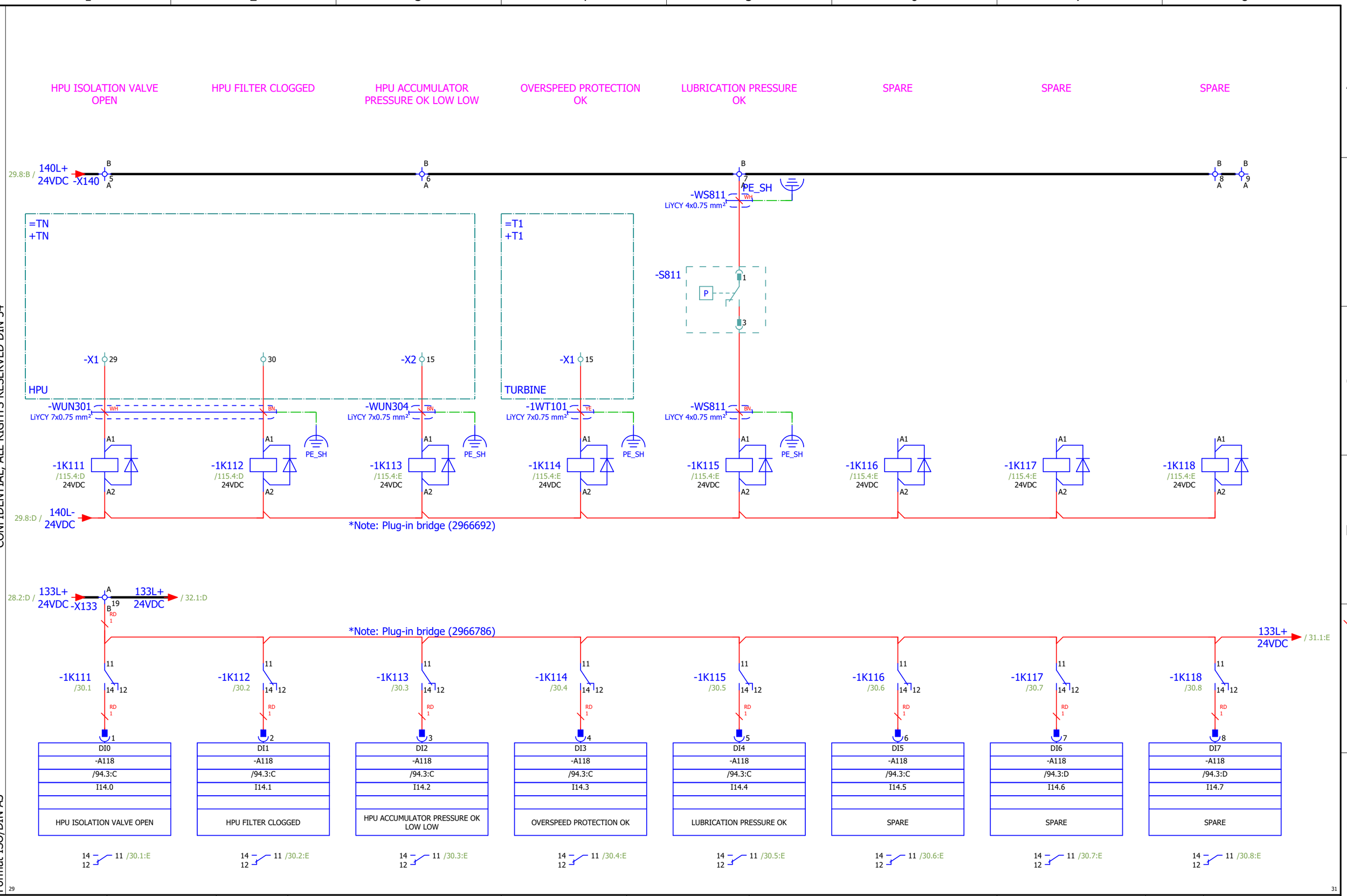

CONFIDENTIAL, ALL RIGHTS RESERVED DIN 34

Format ISO/DIN A3

Approved by Contractor			Reconstruction and Modernisation of HPP Perucica - Phase II	epcg	SINTAKSA A Voith Company	Unit KA1 control cubicle circuit diagrams	DRAWING No.: PERU-01-19-170-31-001	REV No.: 02	= UACJA10GH100
Approved by Designer	Grga Kolić	15.6.2026.			Sintaksa - A Voith Company, Ulica Domovinskog rata 104C, 21 000 Split, Hrvatska				+ UACJA10
Checked by	Antonio Aleksić	15.6.2026.				DIGITAL INPUTS: 14.0 - 14.7	Designer No.:	SALES No.:	PAGE 30
Drawn by	Tamara Trogrlić	15.6.2026.	PROJECT NAME	EMPLOYER	DESIGNER				PAGE 30 / 156

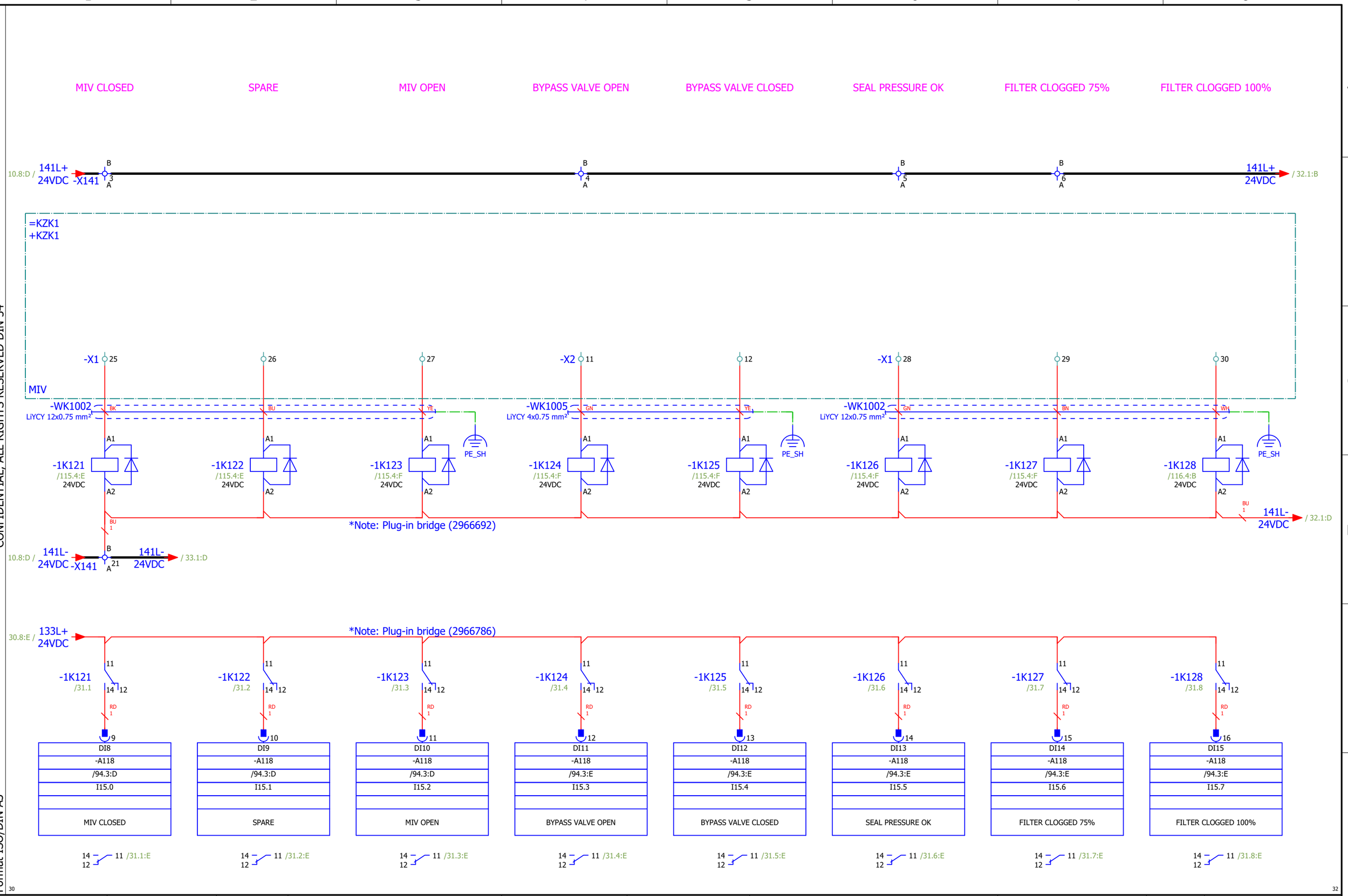

CONFIDENTIAL, ALL RIGHTS RESERVED DIN 34

Format ISO/DIN A3

Approved by Contractor			Reconstruction and Modernisation of HPP Perucica - Phase II	epcg	SINTAKSA A Voith Company	Unit KA1 control cubicle circuit diagrams	DRAWING No.:	REV No.:	= UACJA10GH100
Approved by Designer	Grga Kolić	15.6.2026.			Sintaksa - A Voith Company Ulica Domovinskog rata 104C, 21 000 Split, Hrvatska		PERU-01-19-170-31-001	02	+ UACJA10
Checked by	Antonio Aleksić	15.6.2026.				DIGITAL INPUTS: 15.0 - 15.7	Designer No.:	SALES No.:	PAGE 31
Drawn by	Tamara Trogrlić	15.6.2026.	PROJECT NAME	EMPLOYER	DESIGNER				PAGE 31 / 156

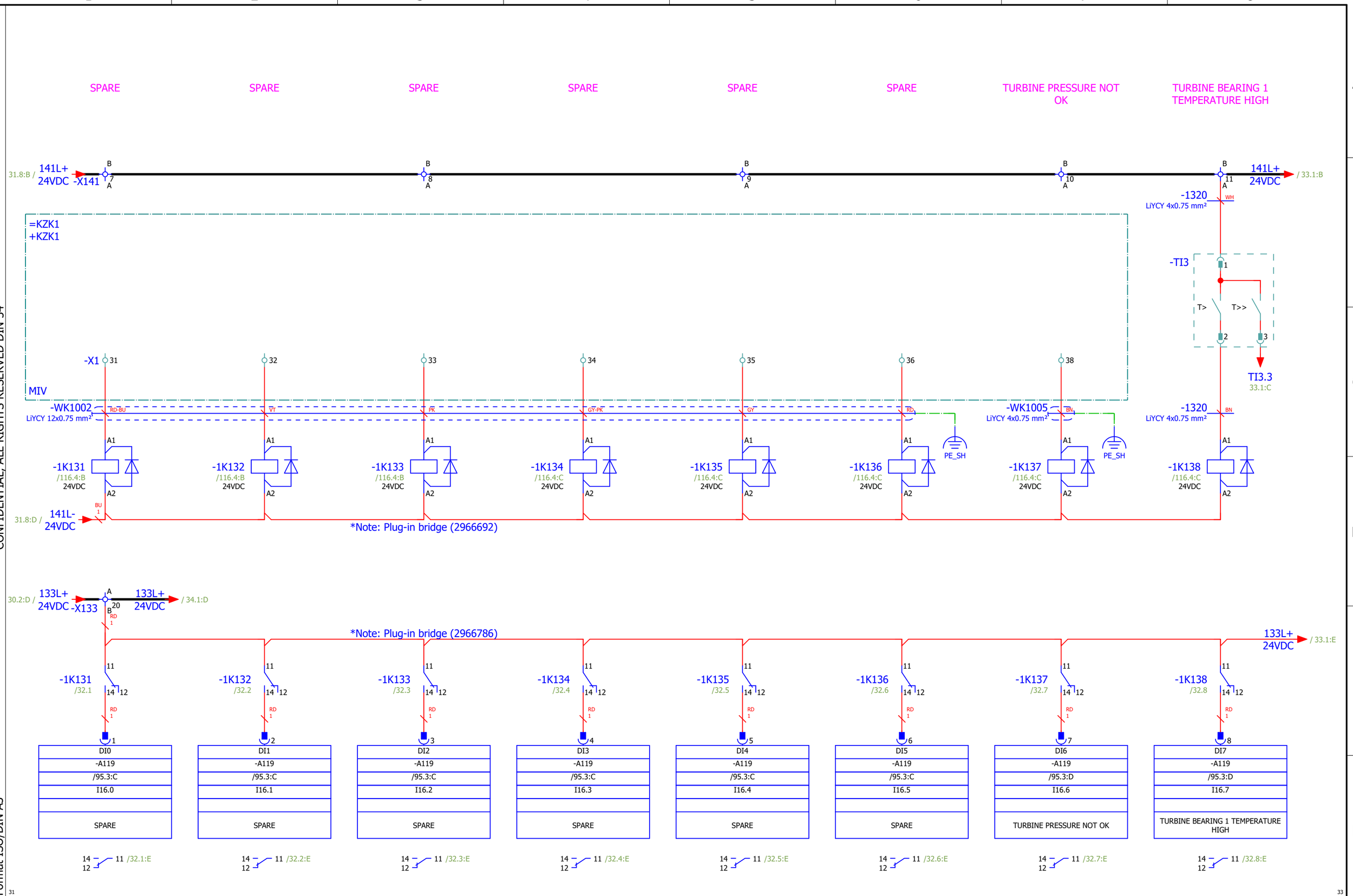

CONFIDENTIAL, ALL RIGHTS RESERVED DIN 34

Format ISO/DIN A3

Approved by Contractor			Reconstruction and Modernisation of HPP Perucica - Phase II	epcg	SINTAKSA A Voith Company	Unit KA1 control cubicle circuit diagrams	DRAWING No.: PERU-01-19-170-31-001	REV No.: 02	= UACJA10GH100
Approved by Designer	Grga Kolić	15.6.2026.							+ UACJA10
Checked by	Antonio Aleksić	15.6.2026.			Sintaksa - A Voith Company, Ulica Domovinskog rata 104C, 21 000 Split, Hrvatska	DIGITAL INPUTS: 16.0 - 16.7	Designer No.:	SALES No.:	PAGE 32
Drawn by	Tamara Trogrlić	15.6.2026.	PROJECT NAME	EMPLOYER	DESIGNER				PAGE 32 / 156

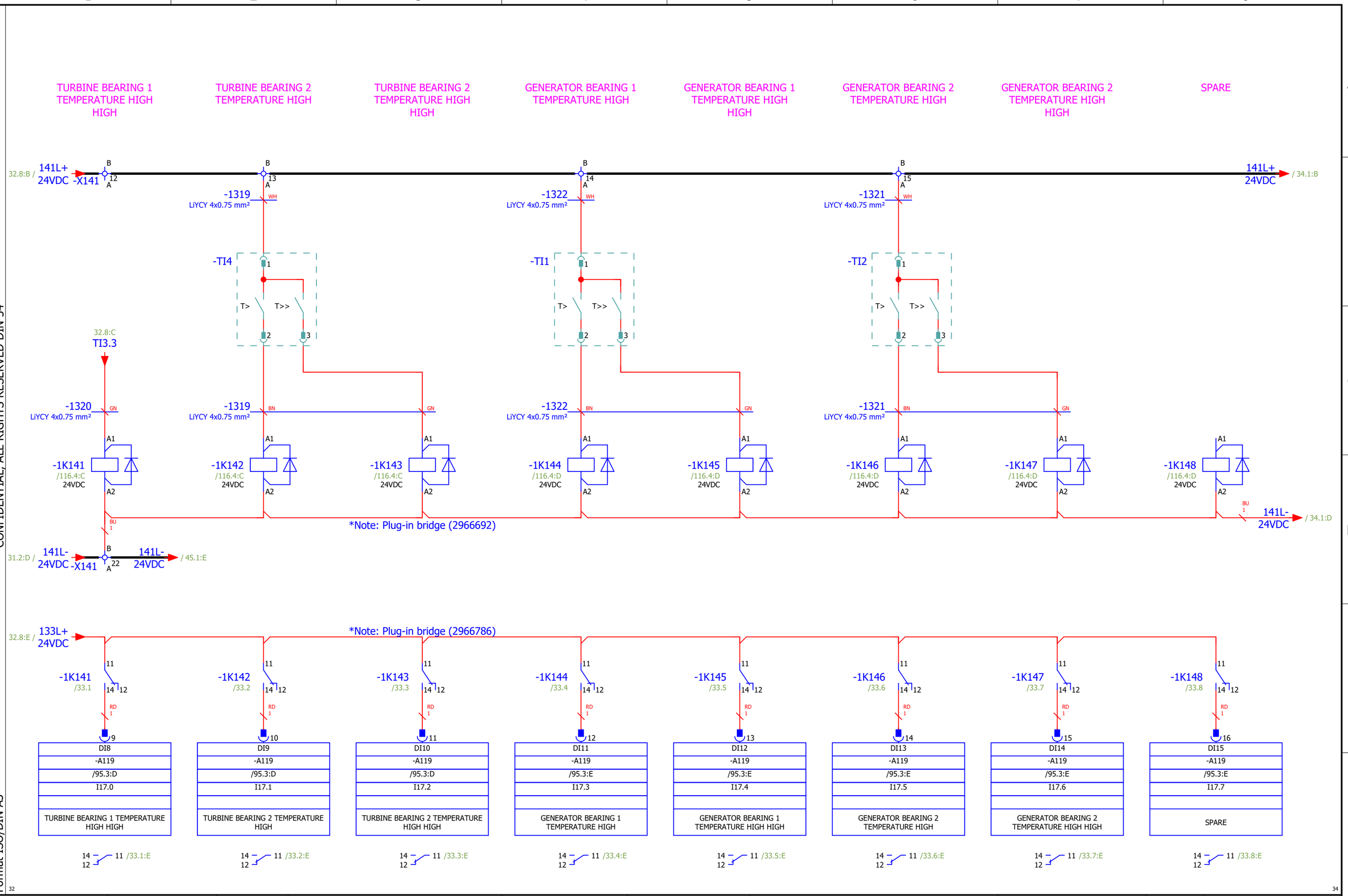

CONFIDENTIAL, ALL RIGHTS RESERVED DIN 34

Format ISO/DIN A3

Approved by Contractor			Reconstruction and Modernisation of HPP Perucica - Phase II	epcg	SINTAKSA A Voith Company	Unit KA1 control cubicle circuit diagrams	DRAWING No.: PERU-01-19-170-31-001	REV No.: 02	= UACJA10GH100
Approved by Designer	Grga Kolić	15.6.2026.			Sintaksa - A Voith Company Ulica Domovinskog rata 104C, 21 000 Split, Hrvatska				+ UACJA10
Checked by	Antonio Aleksić	15.6.2026.				DIGITAL INPUTS: 17.0 - 17.7	Designer No.:	SALES No.:	PAGE 33
Drawn by	Tamara Trogrlić	15.6.2026.	PROJECT NAME	EMPLOYER	DESIGNER				PAGE 33 / 156

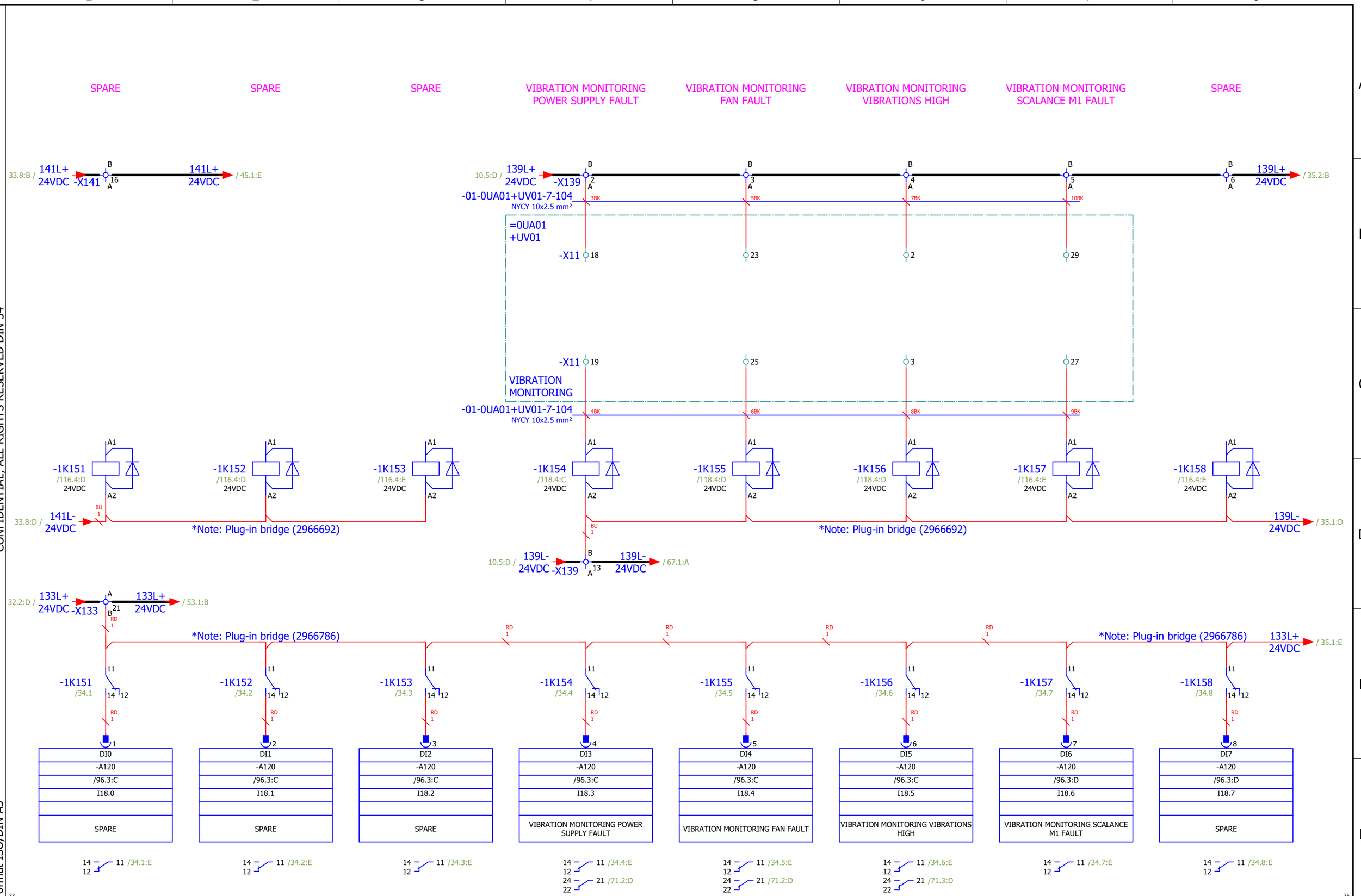

CONFIDENTIAL, ALL RIGHTS RESERVED DIN 34

Format ISO/DIN A3

Approved by Contractor			Reconstruction and Modernisation of HPP Perucica - Phase II	epcg	SINTAKSA A Voith Company	Unit KA1 control cubicle circuit diagrams	DRAWING No.: PERU-01-19-170-31-001	REV No.: 02	= UACJA10GH100
Approved by Designer	Grga Kolić	15.6.2026.			Sintaksa - A Voith Company Ulica Domovinskog rata 104C, 21 000 Split, Hrvatska				+ UACJA10
Checked by	Antonio Aleksić	15.6.2026.				DIGITAL INPUTS: 18.0 - 18.7	Designer No.:	SALES No.:	PAGE 34
Drawn by	Tamara Trogrlić	15.6.2026.	PROJECT NAME	EMPLOYER	DESIGNER				PAGE 34 / 156

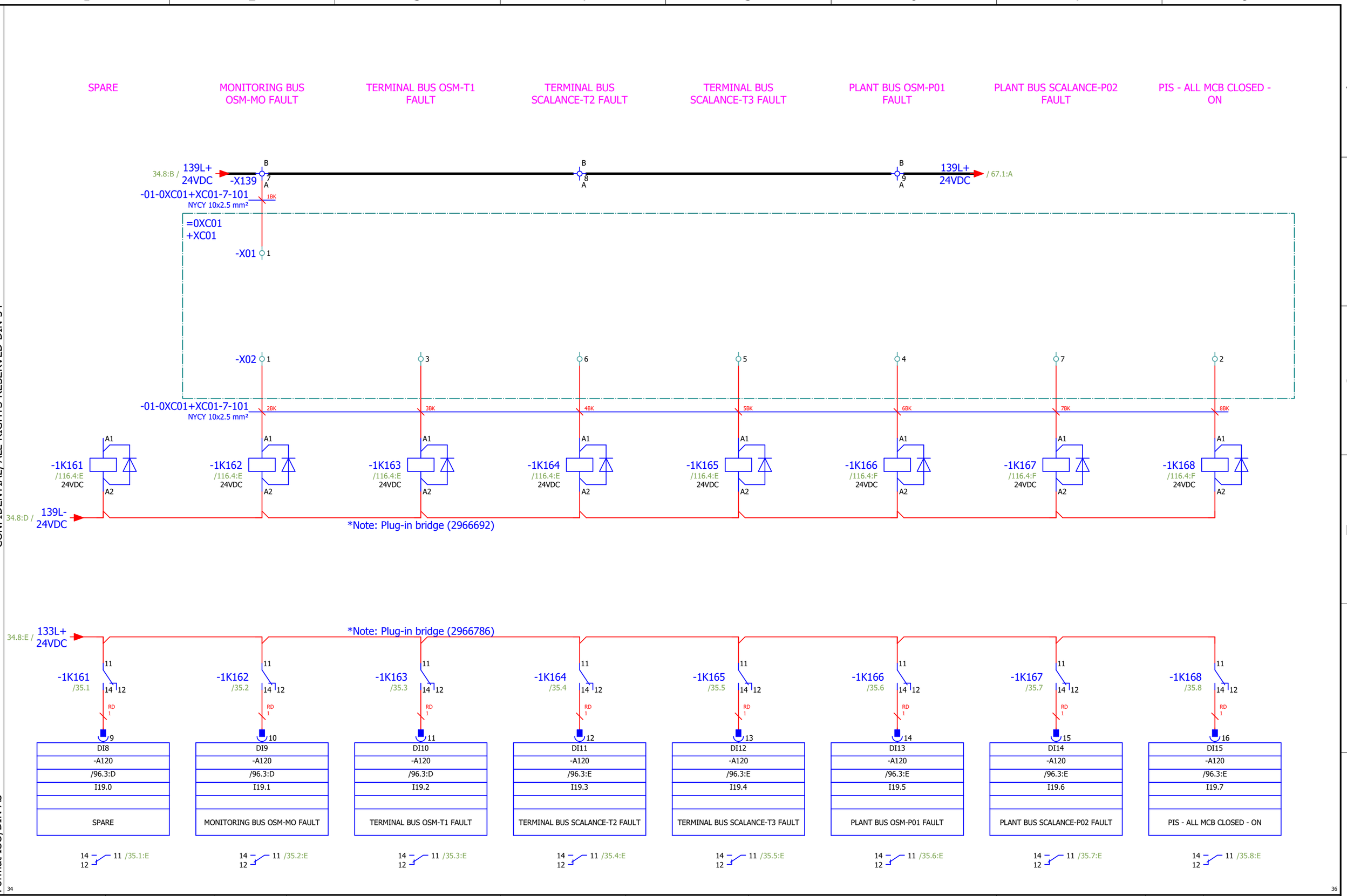

CONFIDENTIAL, ALL RIGHTS RESERVED DIN 34

Format ISO/DIN A3

Approved by Contractor			Reconstruction and Modernisation of HPP Perucica - Phase II	epcg	SINTAKSA A Voith Company	Unit KA1 control cubicle circuit diagrams	DRAWING No.:	REV No.:	= UACJA10GH100
Approved by Designer	Grga Kolić	15.6.2026.			Sintaksa - A Voith Company, Ulica Domovinskog rata 104C, 21 000 Split, Hrvatska		PERU-01-19-170-31-001	02	+ UACJA10
Checked by	Antonio Aleksić	15.6.2026.				DIGITAL INPUTS: 19.0 - 19.7	Designer No.:	SALES No.:	PAGE 35
Drawn by	Tamara Trogrlić	15.6.2026.	PROJECT NAME	EMPLOYER	DESIGNER				PAGE 35 / 156

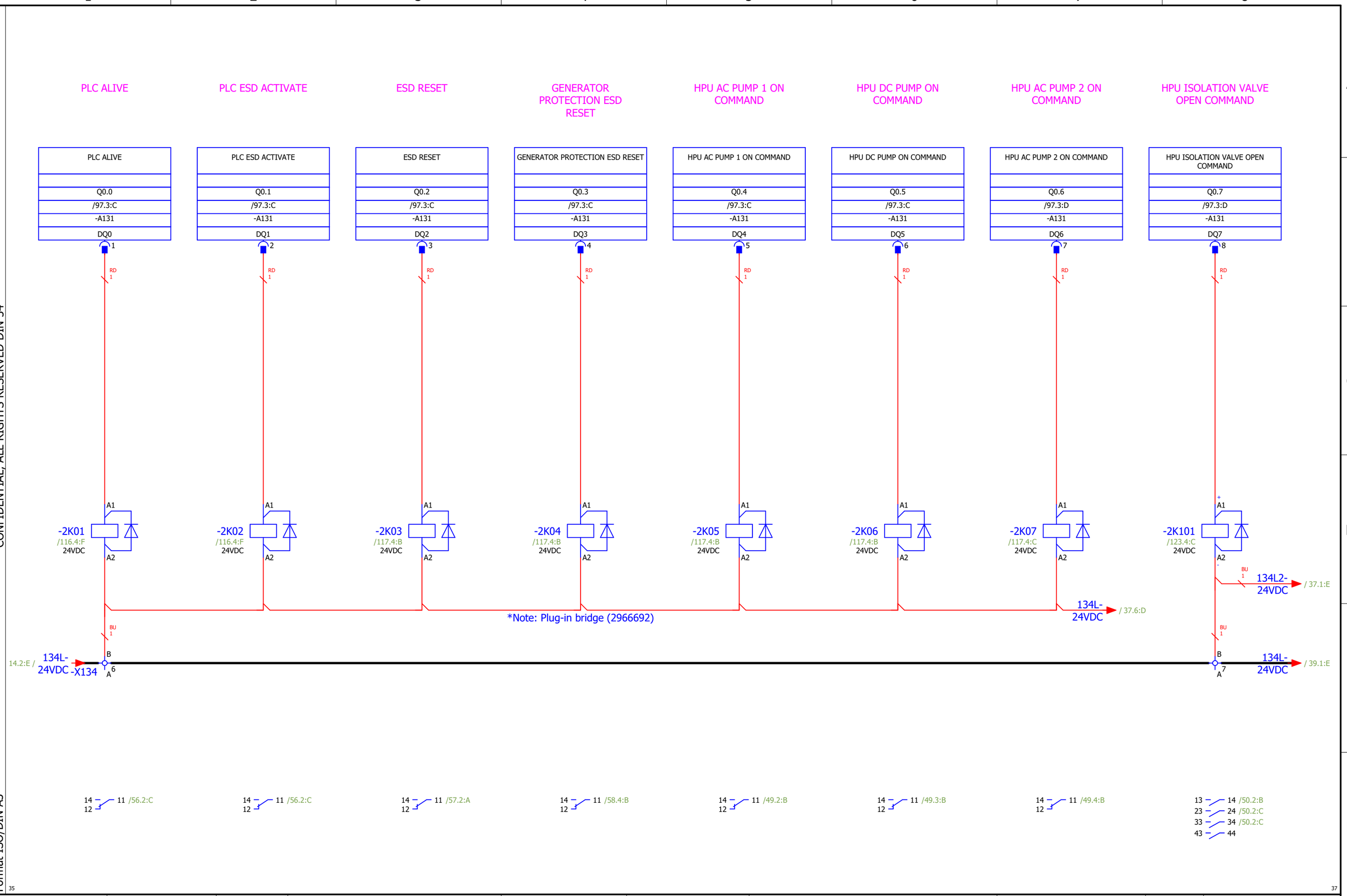

CONFIDENTIAL, ALL RIGHTS RESERVED DIN 34

Format ISO/DIN A3

Approved by Contractor			Reconstruction and Modernisation of HPP Perucica - Phase II	epcg	SINTAKSA A Voith Company Sintaksa - A Voith Company Ulica Domovinskog rata 104C, 21 000 Split, Hrvatska	Unit KA1 control cubicle circuit diagrams	DRAWING No.: PERU-01-19-170-31-001	REV No.: 02	= UACJA10GH100
Approved by Designer	Grga Kolić	15.6.2026.							+ UACJA10
Checked by	Antonio Aleksić	15.6.2026.				DIGITAL OUTPUTS: 0.0 - 0.7	Designer No.:	SALES No.:	PAGE 36
Drawn by	Tamara Trogrlić	15.6.2026.	PROJECT NAME	EMPLOYER	DESIGNER				PAGE 36 / 156

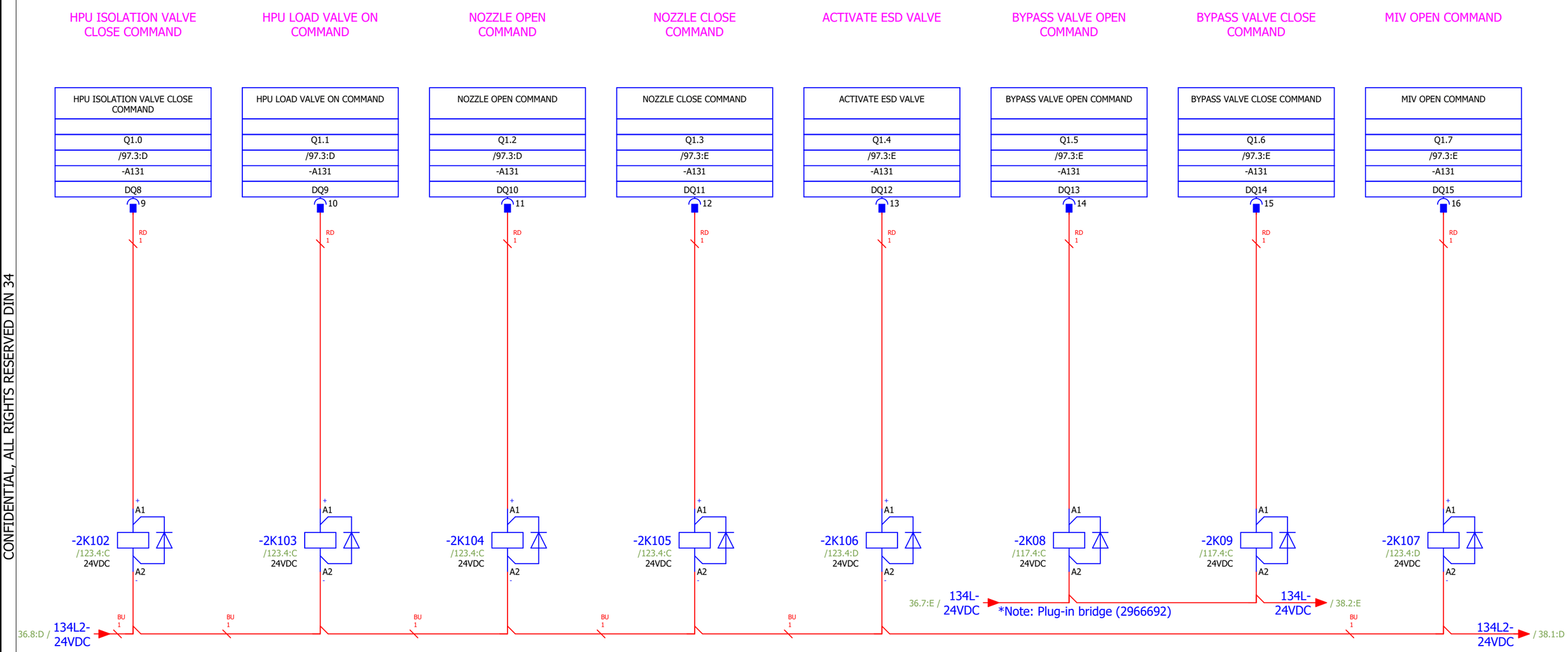

CONFIDENTIAL, ALL RIGHTS RESERVED DIN 34

Format ISO/DIN A3

Approved by Contractor			Reconstruction and Modernisation of HPP Perucica - Phase II	epcg	SINTAKSA A Voith Company Sintaksa - A Voith Company Ulica Domovinskog rata 104C, 21 000 Split, Hrvatska	Unit KA1 control cubicle circuit diagrams	DRAWING No.:	REV No.:	= UACJA10GH100
Approved by Designer	Grga Kolić	15.6.2026.					PERU-01-19-170-31-001	02	+ UACJA10
Checked by	Antonio Aleksić	15.6.2026.				DIGITAL OUTPUTS: 1.0 - 1.7	Designer No.:	SALES No.:	PAGE 37
Drawn by	Tamara Trogrlić	15.6.2026.	PROJECT NAME	EMPLOYER	DESIGNER				PAGE 37 / 156

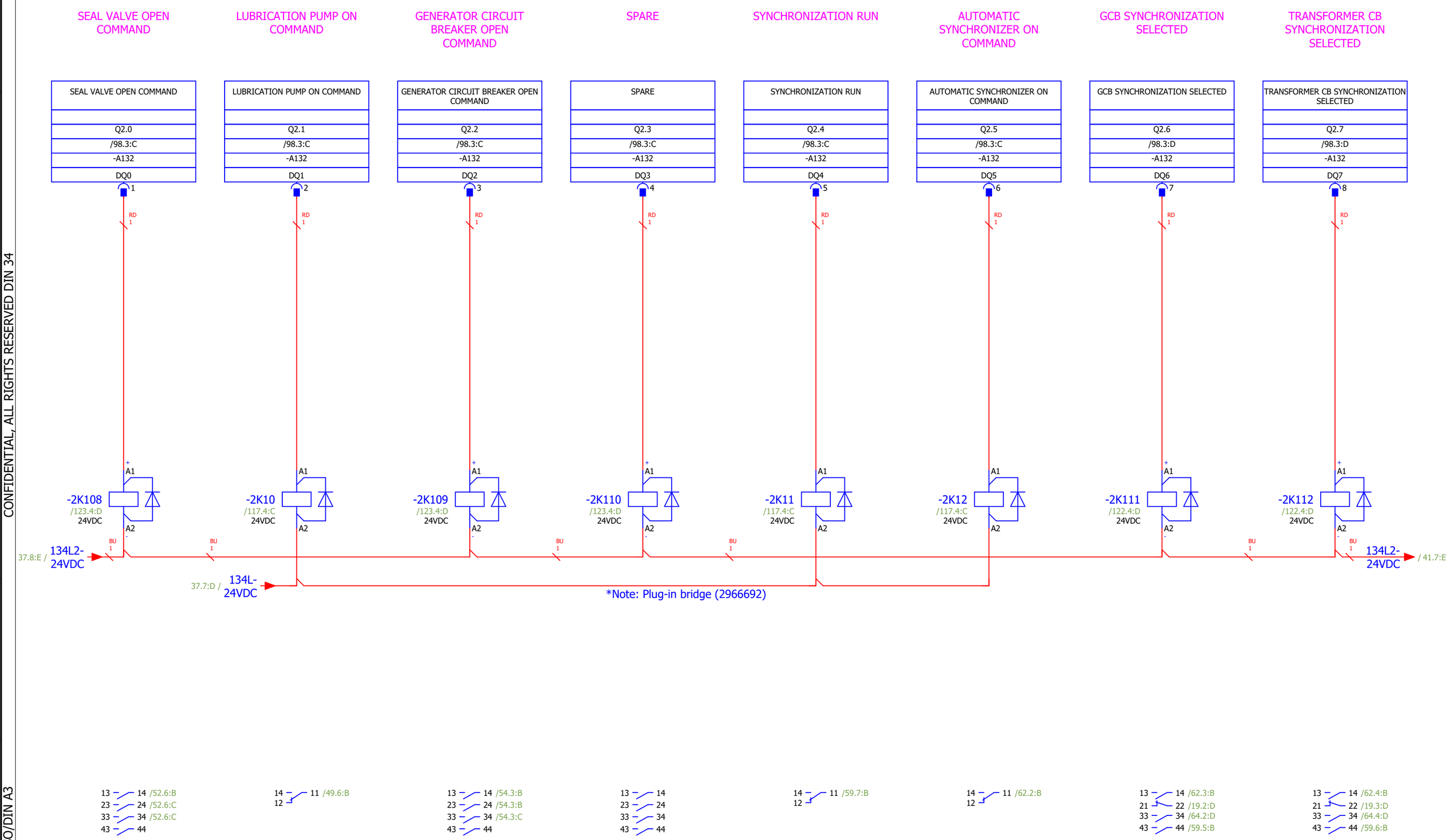

CONFIDENTIAL, ALL RIGHTS RESERVED DIN 34

Format ISO/DIN A3

Approved by Contractor			Reconstruction and Modernisation of HPP Perucica - Phase II	epcg	SINTAKSA A Voith Company Sintaksa - A Voith Company Ulica Domovinskog rata 104C, 21 000 Split, Hrvatska	Unit KA1 control cubicle circuit diagrams DIGITAL OUTPUTS: 2.0 - 2.7	DRAWING No.: PERU-01-19-170-31-001	REV No.: 02	= UACJA10GH100
Approved by Designer	Grga Kolić	15.6.2026.							+ UACJA10
Checked by	Antonio Aleksić	15.6.2026.					Designer No.:	SALES No.:	PAGE 38
Drawn by	Tamara Trogrlić	15.6.2026.	PROJECT NAME	EMPLOYER	DESIGNER				PAGE 38 / 156

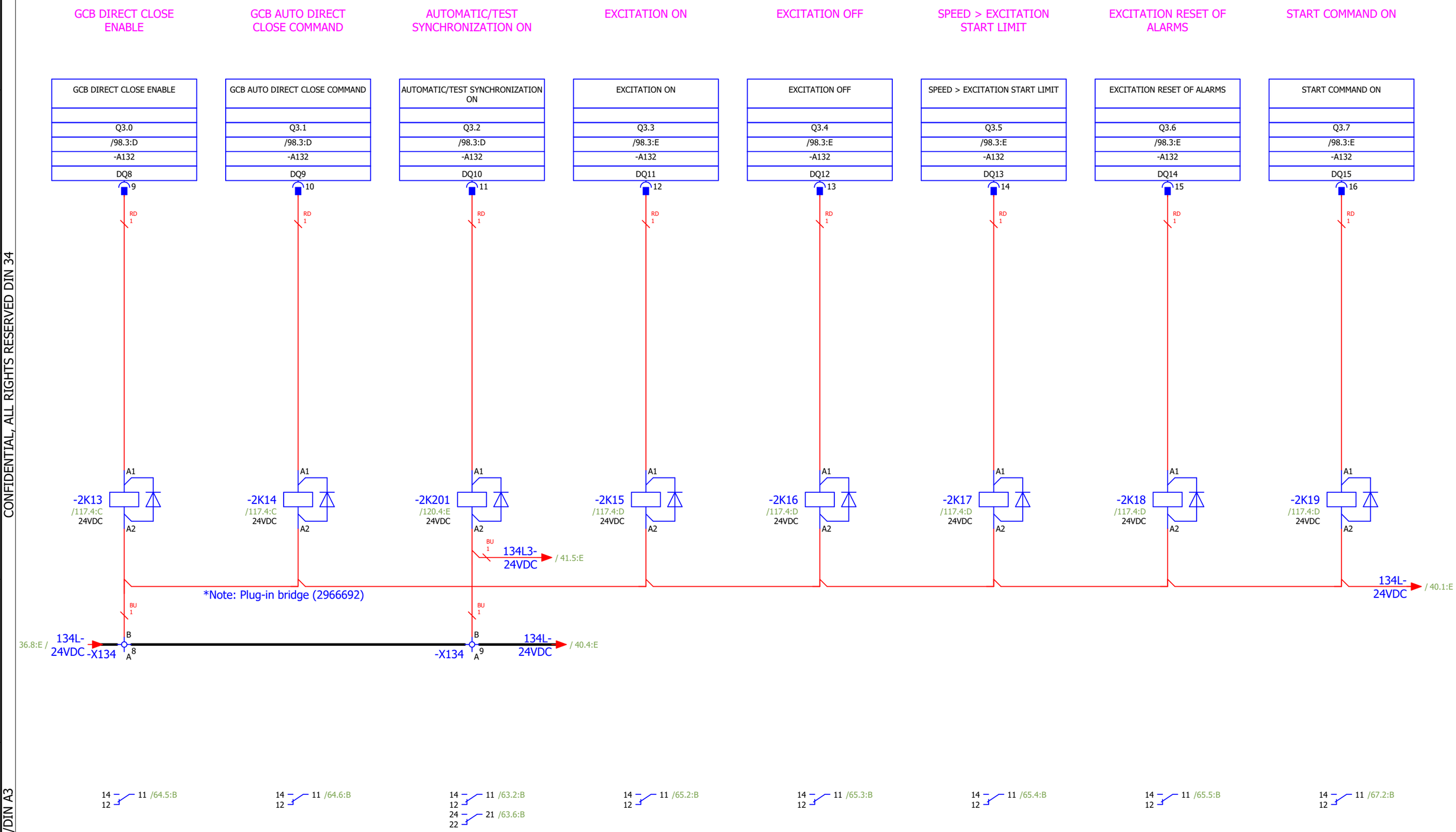

CONFIDENTIAL, ALL RIGHTS RESERVED DIN 34

Format ISO/DIN A3

Approved by Contractor			Reconstruction and Modernisation of HPP Perucica - Phase II	epcg	SINTAKSA A Voith Company Sintaksa - A Voith Company Ulica Domovinskog rata 104C, 21 000 Split, Hrvatska	Unit KA1 control cubicle circuit diagrams	DRAWING No.: PERU-01-19-170-31-001	REV No.: 02	= UACJA10GH100
Approved by Designer	Grga Kolić	15.6.2026.							+ UACJA10
Checked by	Antonio Aleksić	15.6.2026.				DIGITAL OUTPUTS: 3.0 -3.7	Designer No.:	SALES No.:	PAGE 39
Drawn by	Tamara Trogrlić	15.6.2026.	PROJECT NAME	EMPLOYER	DESIGNER				PAGE 39 / 156

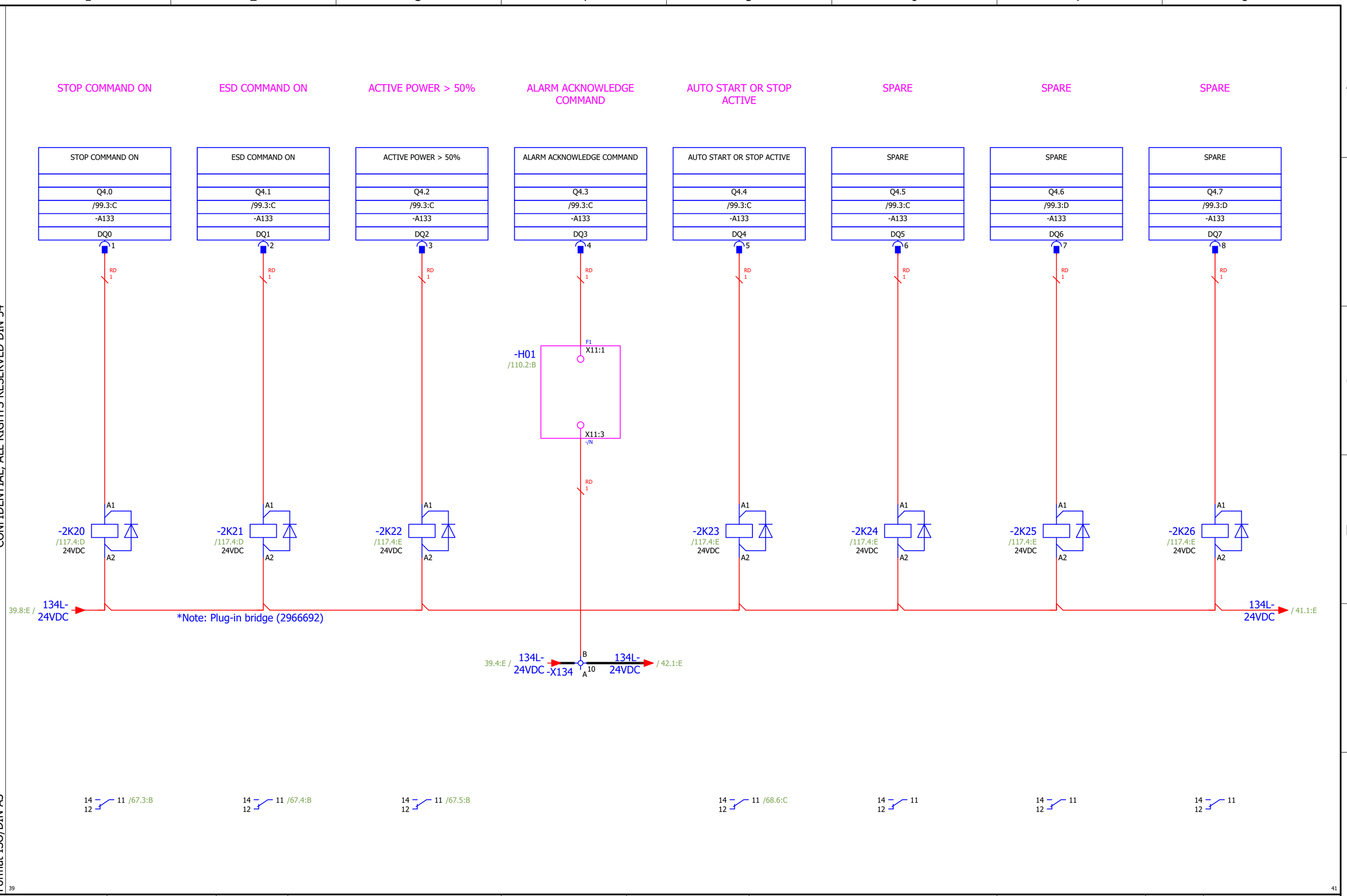

CONFIDENTIAL, ALL RIGHTS RESERVED DIN 34

Format ISO/DIN A3

Approved by Contractor			Reconstruction and Modernisation of HPP Perucica - Phase II	epcg	SINTAKSA A Voith Company Sintaksa - A Voith Company Ulica Domovinskog rata 104C, 21 000 Split, Hrvatska	Unit KA1 control cubicle circuit diagrams	DRAWING No.: PERU-01-19-170-31-001	REV No.: 02	= UACJA10GH100
Approved by Designer	Grga Kolić	15.6.2026.							+ UACJA10
Checked by	Antonio Aleksić	15.6.2026.				DIGITAL OUTPUTS: 4.0 - 4.7	Designer No.:	SALES No.:	PAGE 40
Drawn by	Tamara Trogrlić	15.6.2026.	PROJECT NAME	EMPLOYER	DESIGNER				PAGE 40 / 156

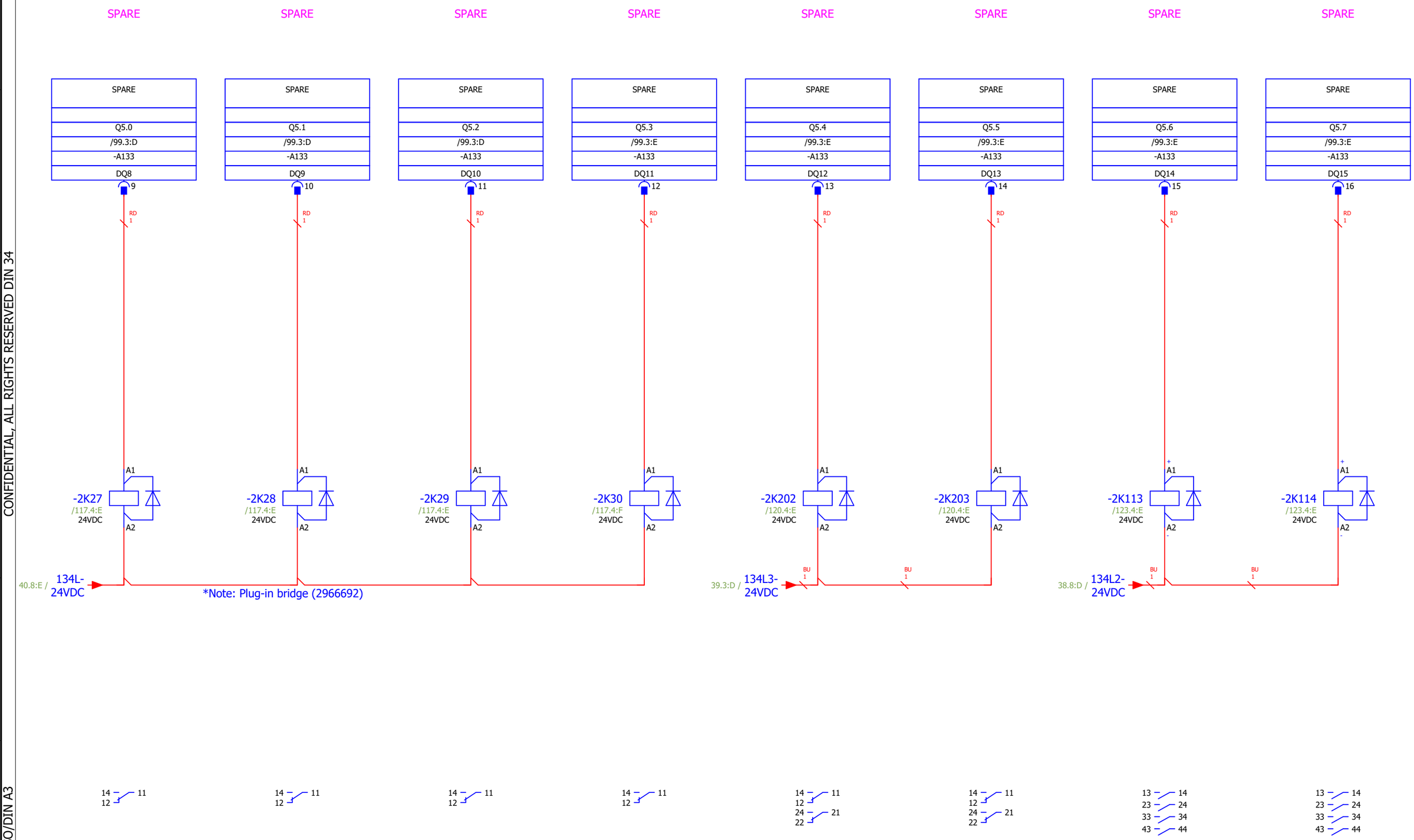

CONFIDENTIAL, ALL RIGHTS RESERVED DIN 34

Format ISO/DIN A3

Approved by Contractor			Reconstruction and Modernisation of HPP Perucica - Phase II	epcg	SINTAKSA A Voith Company Sintaksa - A Voith Company Ulica Domovinskog rata 104Ç, 21 000 Split, Hrvatska	Unit KA1 control cubicle circuit diagrams	DRAWING No.:	REV No.:	= UACJA10GH100
Approved by Designer	Grga Kolić	15.6.2026.					PERU-01-19-170-31-001	02	+ UACJA10
Checked by	Antonio Aleksić	15.6.2026.				DIGITAL OUTPUTS: 5.0 - 5.7	Designer No.:	SALES No.:	PAGE 41
Drawn by	Tamara Trogrlić	15.6.2026.	PROJECT NAME	EMPLOYER	DESIGNER				PAGE 41 / 156

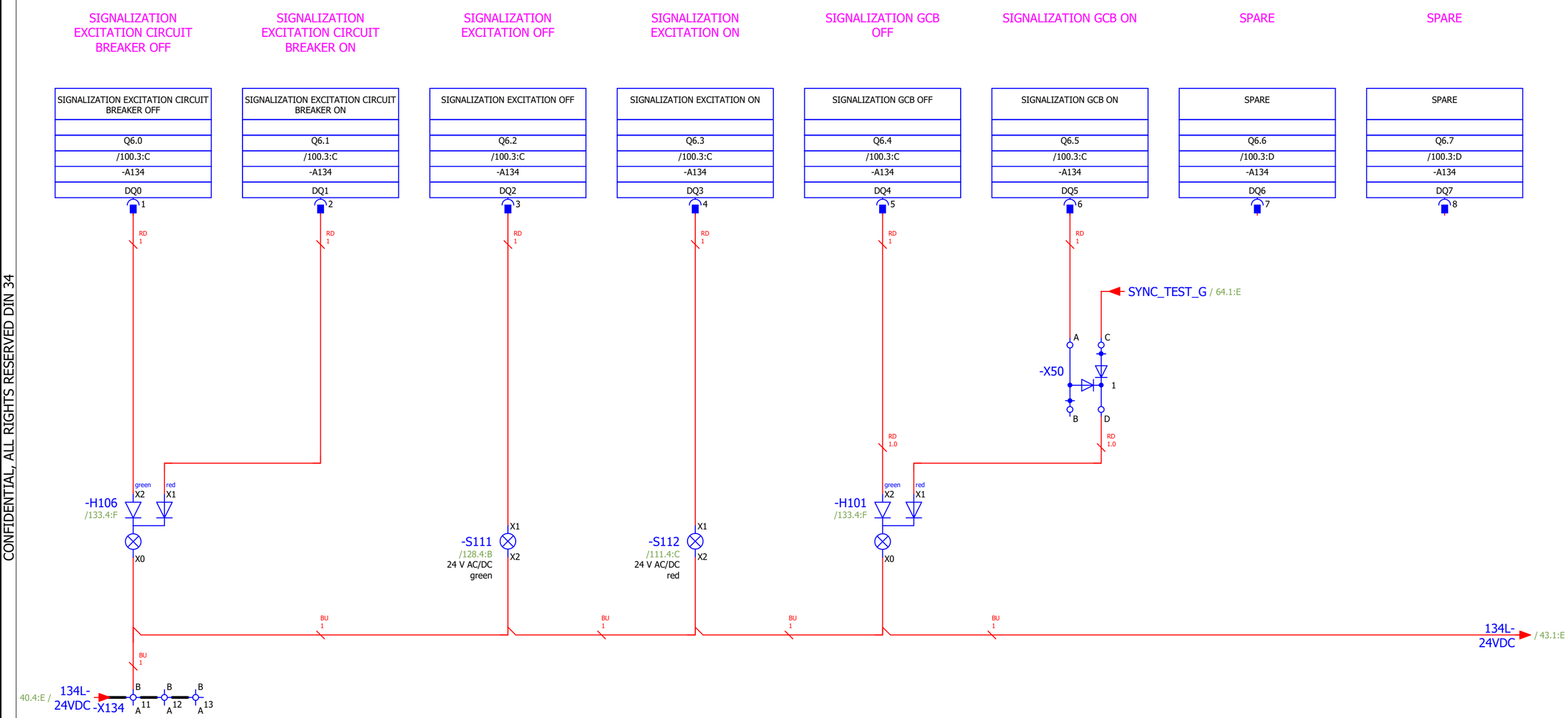

CONFIDENTIAL, ALL RIGHTS RESERVED DIN 34

Format ISO/DIN A3

Approved by Contractor			Reconstruction and Modernisation of HPP Perucica - Phase II	epcg	SINTAKSA A Voith Company	Unit KA1 control cubicle circuit diagrams	DRAWING No.:	REV No.:	= UACJA10GH100
Approved by Designer	Grga Kolić	15.6.2026.			Sintaksa - A Voith Company Ulica Domovinskog rata 104C, 21 000 Split, Hrvatska		PERU-01-19-170-31-001	02	+ UACJA10
Checked by	Antonio Aleksić	15.6.2026.				DIGITAL OUTPUTS: 6.0 - 6.7	Designer No.:	SALES No.:	PAGE 42
Drawn by	Tamara Trogrlić	15.6.2026.	PROJECT NAME	EMPLOYER	DESIGNER				PAGE 42 / 156

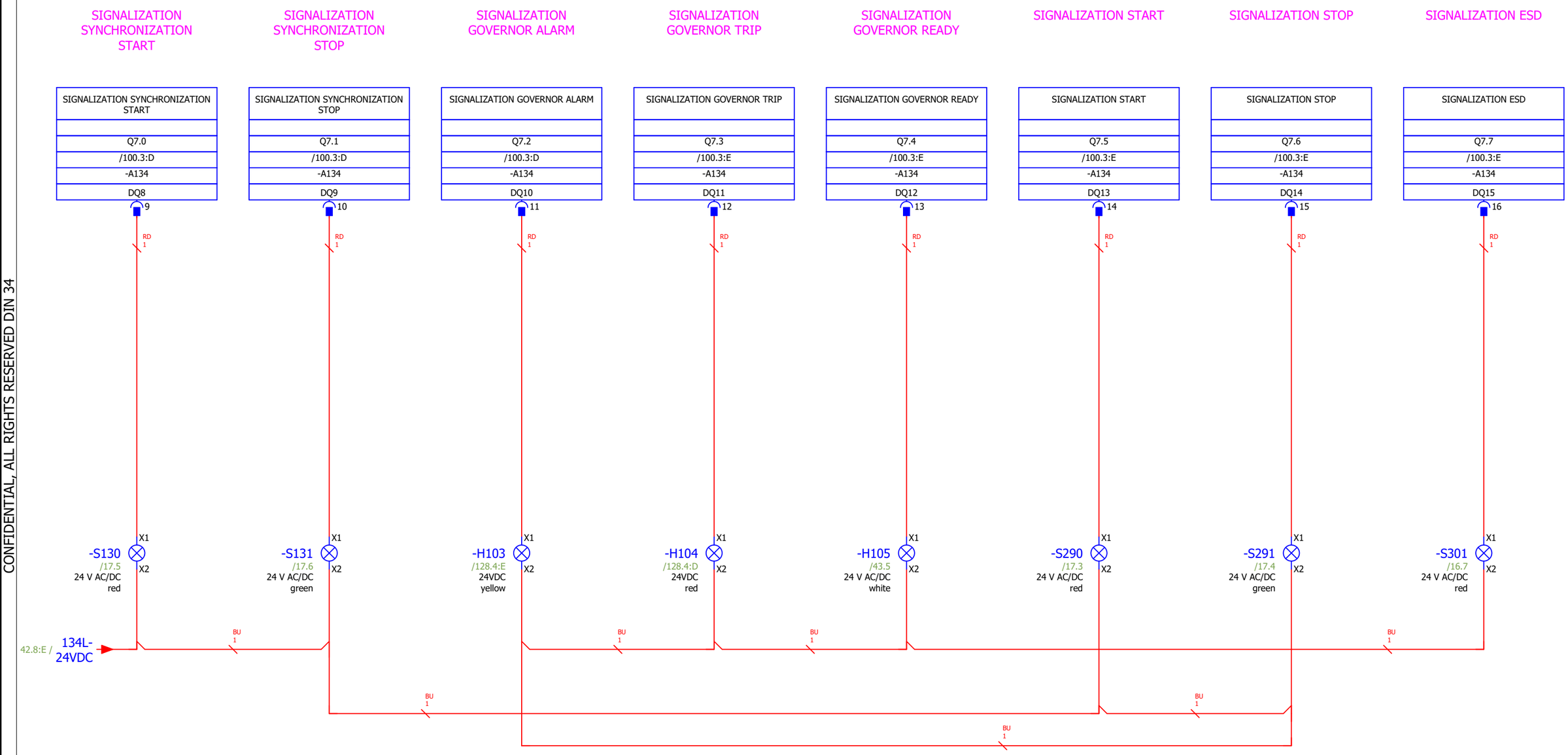

CONFIDENTIAL, ALL RIGHTS RESERVED DIN 34

Format ISO/DIN A3

42

44

Approved by Contractor			Reconstruction and Modernisation of HPP Perucica - Phase II	epcg	SINTAKSA A Voith Company Sintaksa - A Voith Company Ulica Domovinskog rata 104Ç, 21 000 Split, Hrvatska	Unit KA1 control cubicle circuit diagrams	DRAWING No.:	REV No.:	= UACJA10GH100
Approved by Designer	Grga Kolić	15.6.2026.					PERU-01-19-170-31-001	02	+ UACJA10
Checked by	Antonio Aleksić	15.6.2026.				DIGITAL OUTPUTS: 7.0 - 7.7	Designer No.:	SALES No.:	PAGE 43
Drawn by	Tamara Trogrlić	15.6.2026.	PROJECT NAME	EMPLOYER	DESIGNER				PAGE 43 / 156

CONFIDENTIAL, ALL RIGHTS RESERVED DIN 34

Format ISO/DIN A3

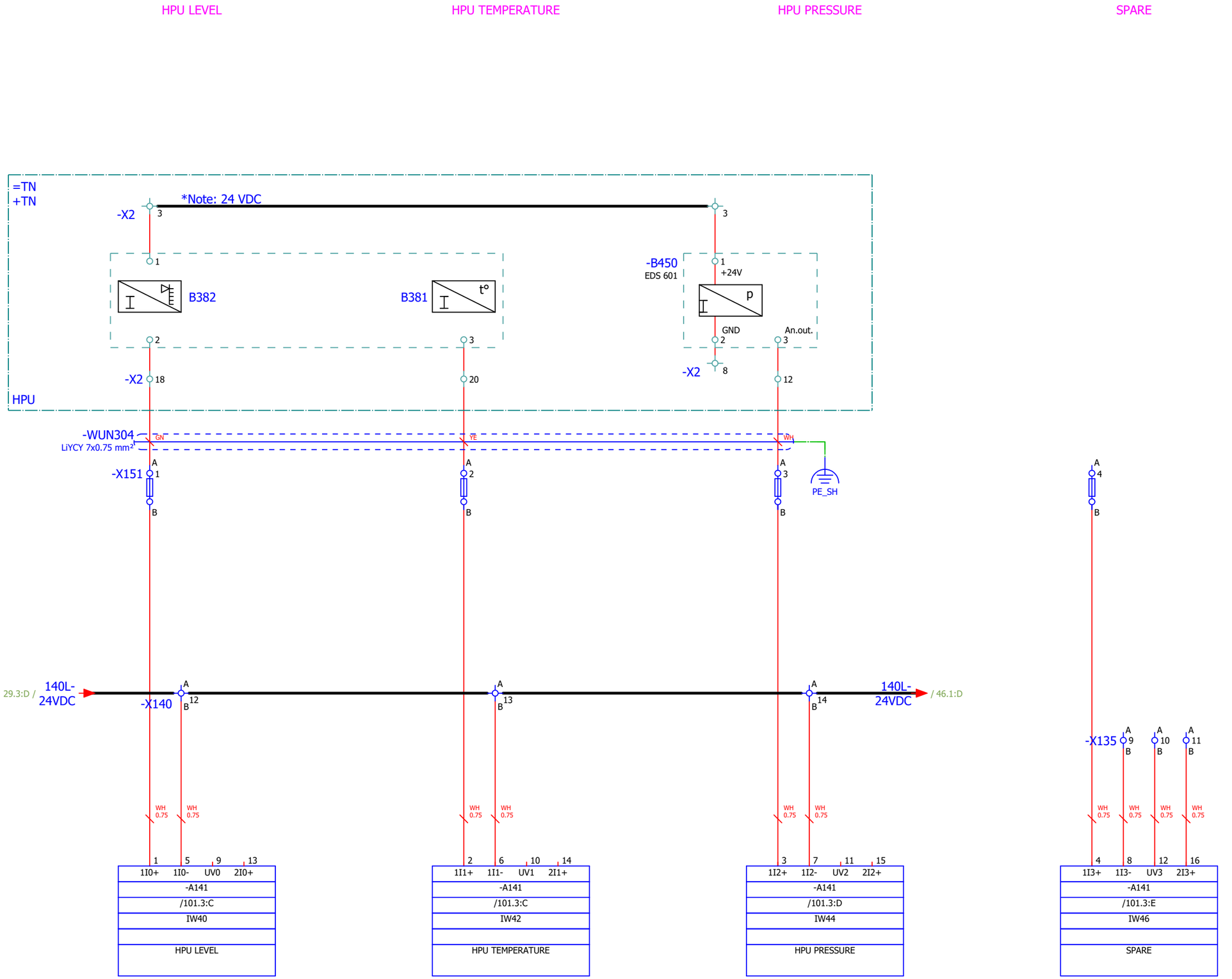

Approved by Contractor			Reconstruction and Modernisation of HPP Perucica - Phase II	epcg	SINTAKSA A Voith Company	Unit KA1 control cubicle circuit diagrams	DRAWING No.: PERU-01-19-170-31-001	REV No.: 02	= UACJA10GH100
Approved by Designer	Grga Kolić	15.6.2026.			Sintaksa - A Voith Company, Ulica Domovinskog rata 104C, 21 000 Split, Hrvatska	ANALOG INPUTS: 1 - 4			+ UACJA10
Checked by	Antonio Aleksić	15.6.2026.					Designer No.:	SALES No.:	PAGE 44
Drawn by	Tamara Trogrlić	15.6.2026.	PROJECT NAME	EMPLOYER	DESIGNER				PAGE 44 / 156

CONFIDENTIAL, ALL RIGHTS RESERVED DIN 34

Format ISO/DIN A3

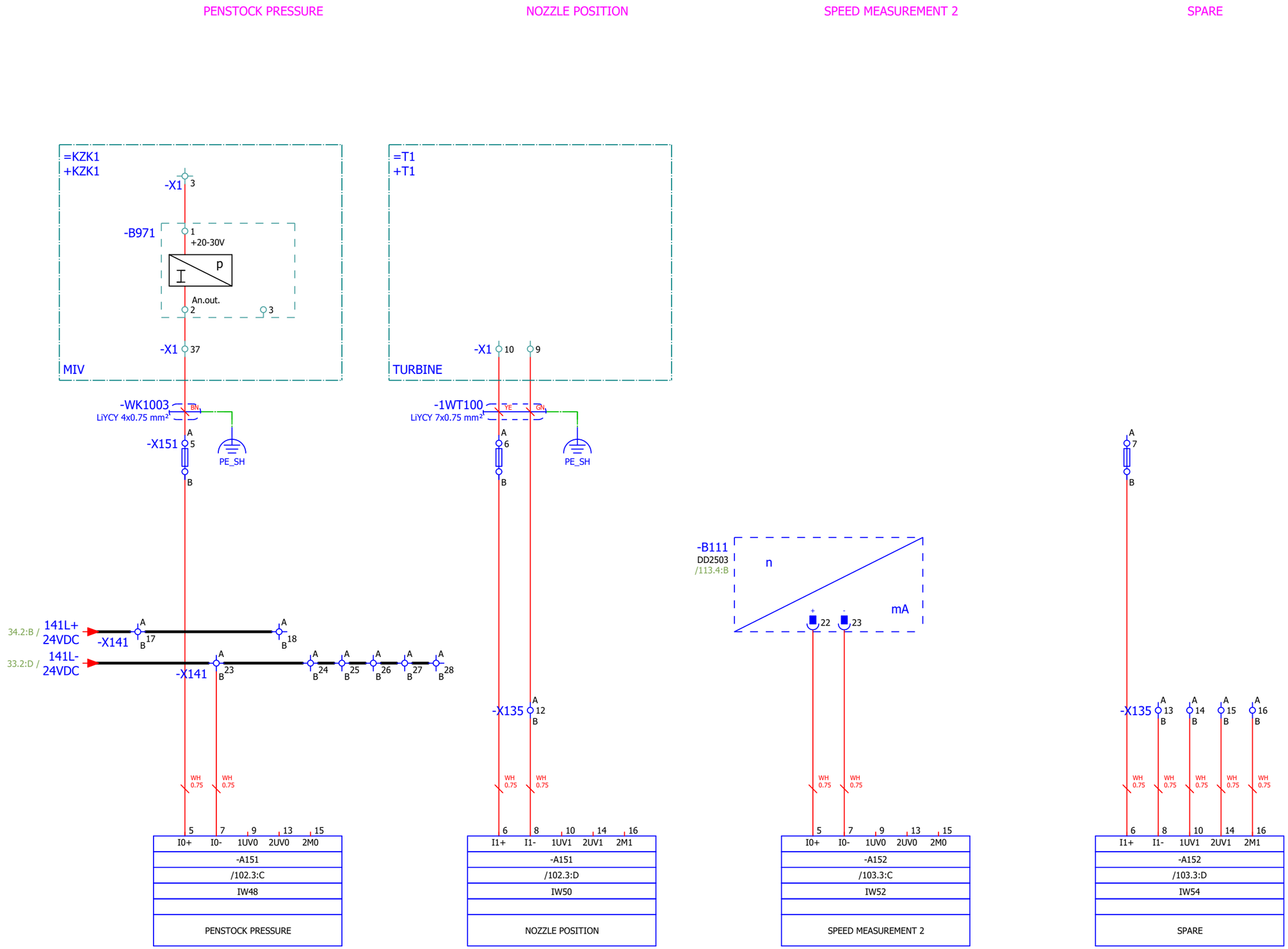

Approved by Contractor			Reconstruction and Modernisation of HPP Perucica - Phase II	epcg	SINTAKSA A Voith Company	Unit KA1 control cubicle circuit diagrams	DRAWING No.: PERU-01-19-170-31-001	REV No.: 02	= UACJA10GH100
Approved by Designer	Grga Kolić	15.6.2026.			Sintaksa - A Voith Company, Ulica Domovinskog rata 104C, 21 000 Split, Hrvatska				+ UACJA10
Checked by	Antonio Aleksić	15.6.2026.				ANALOG INPUTS: 5 - 8	Designer No.:	SALES No.:	PAGE 45
Drawn by	Tamara Trogrlić	15.6.2026.	PROJECT NAME	EMPLOYER	DESIGNER				PAGE 45 / 156

CONFIDENTIAL, ALL RIGHTS RESERVED DIN 34

Format ISO/DIN A3

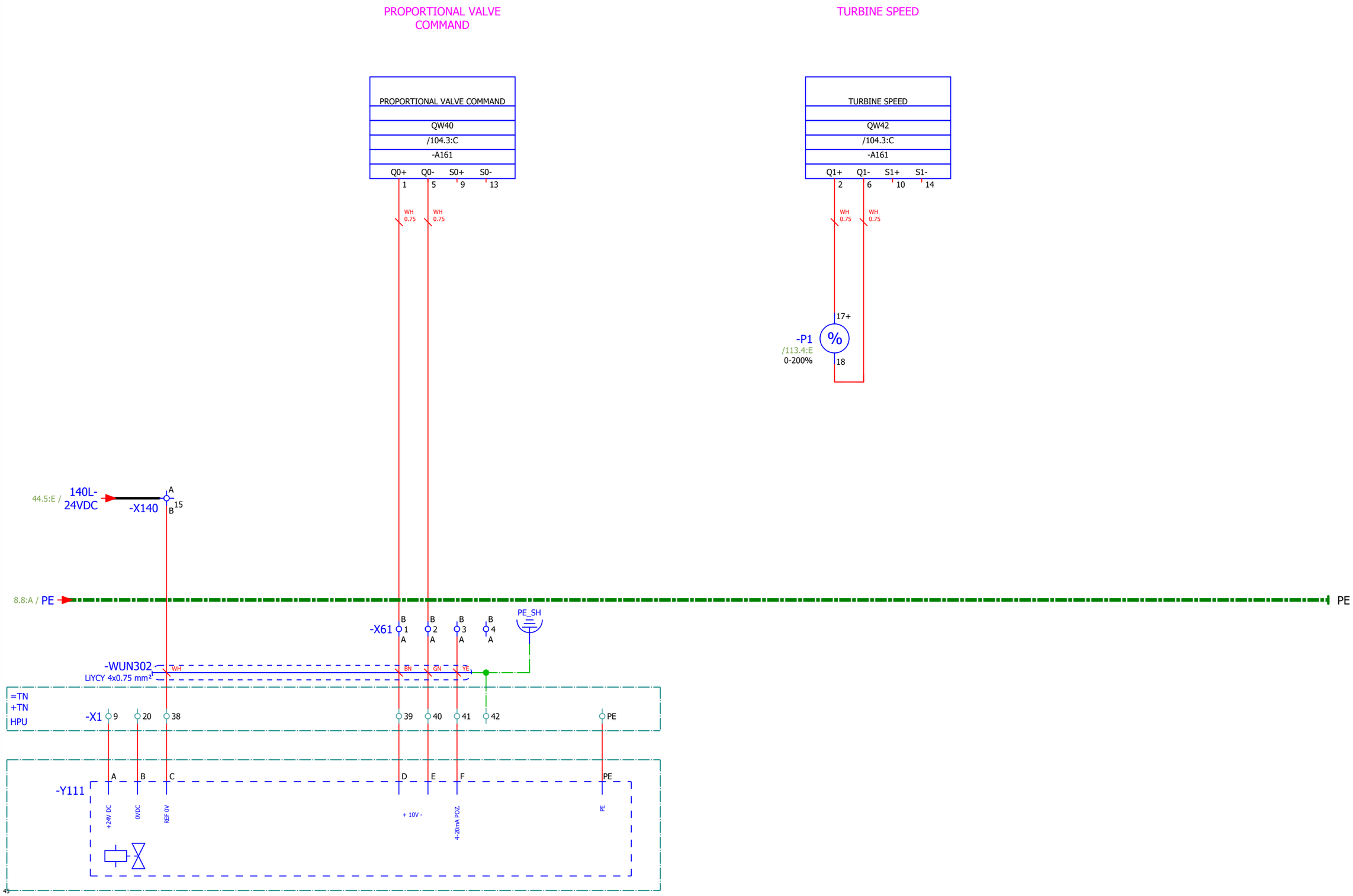

Approved by Contractor			Reconstruction and Modernisation of HPP Perucica - Phase II	epcg	SINTAKSA A Voith Company Sintaksa - A Voith Company Ulica Domovinskog rata 104Ç, 21 000 Split, Hrvatska	Unit KA1 control cubicle circuit diagrams	DRAWING No.:	REV No.:	= UACJA10GH100
Approved by Designer	Grga Kolić	15.6.2026.					PERU-01-19-170-31-001	02	+ UACJA10
Checked by	Antonio Aleksić	15.6.2026.				ANALOG OUTPUTS: 1 - 2	Designer No.:	SALES No.:	PAGE 46
Drawn by	Tamara Trogrlić	15.6.2026.	PROJECT NAME	EMPLOYER	DESIGNER				PAGE 46 / 156

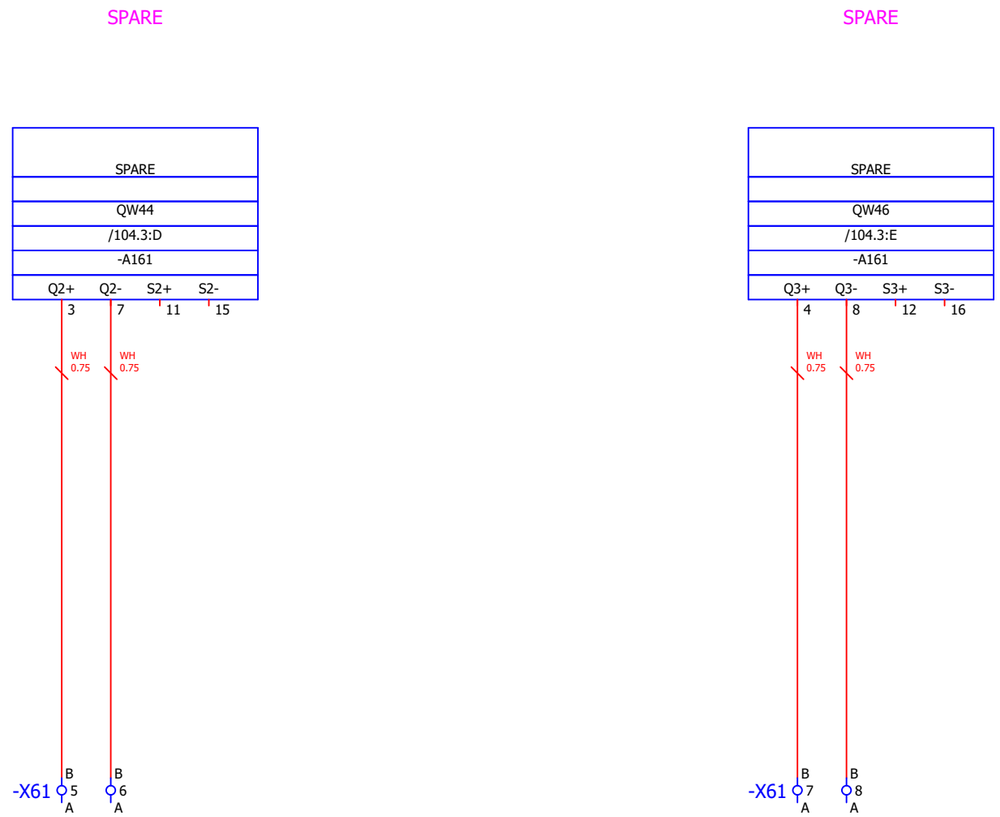

CONFIDENTIAL, ALL RIGHTS RESERVED DIN 34

Format ISO/DIN A3

46

48

Approved by Contractor			Reconstruction and Modernisation of HPP Perucica - Phase II	epcg	SINTAKSA A Voith Company Sintaksa - A Voith Company Ulica Domovinskog rata 104Ç, 21 000 Split, Hrvatska	Unit KA1 control cubicle circuit diagrams	DRAWING No.:	REV No.:	= UACJA10GH100
Approved by Designer	Grga Kolić	15.6.2026.					PERU-01-19-170-31-001	02	+ UACJA10
Checked by	Antonio Aleksić	15.6.2026.				ANALOG OUTPUTS: 3 - 4	Designer No.:	SALES No.:	PAGE 47
Drawn by	Tamara Trogrlić	15.6.2026.	PROJECT NAME	EMPLOYER	DESIGNER				PAGE 47 / 156

CONFIDENTIAL, ALL RIGHTS RESERVED DIN 34

Format ISO/DIN A3

SPEED MEASUREMENT 1

SPEED MEASUREMENT 3

SPEED MEASUREMENT 2

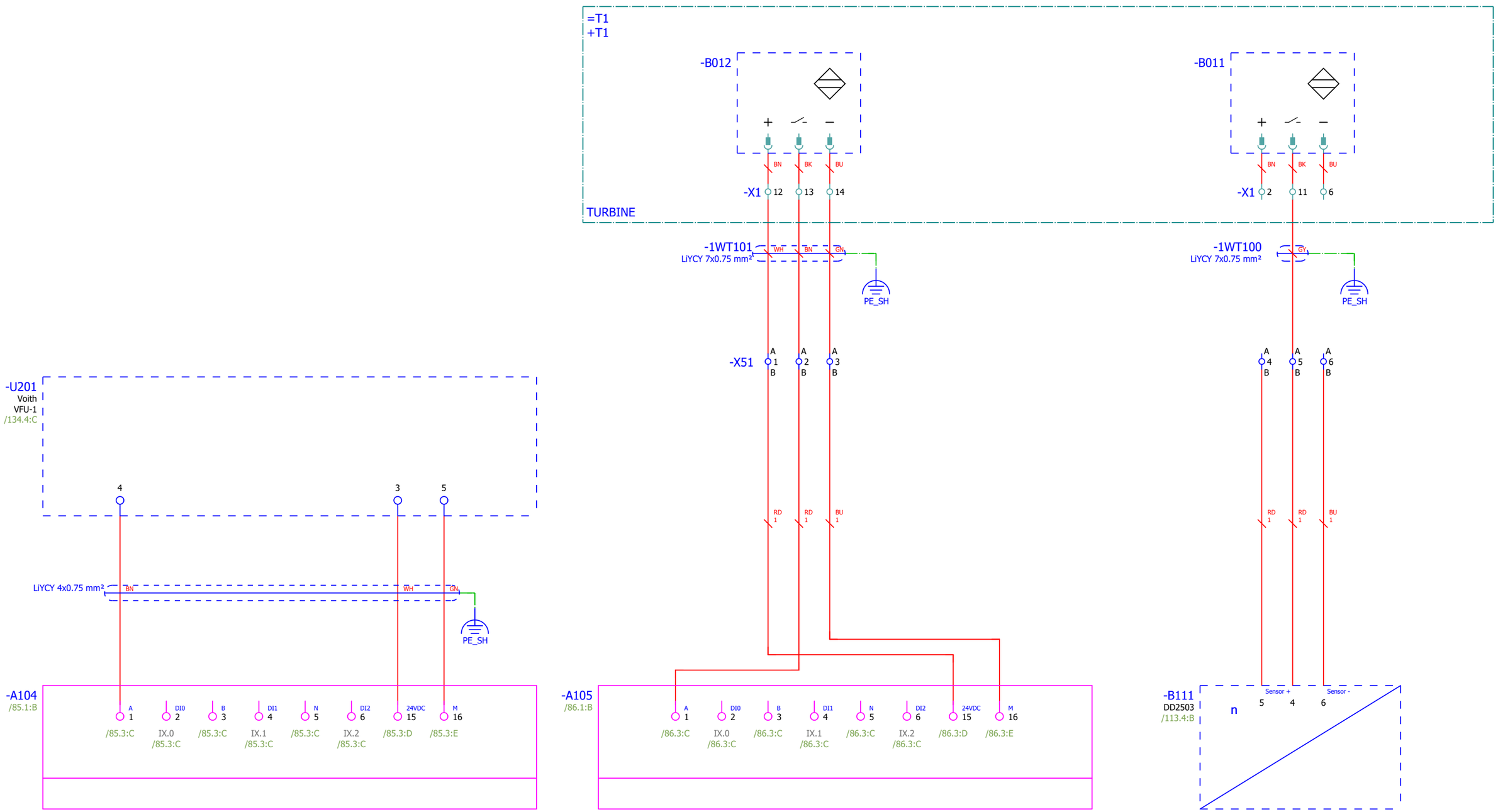

47

49

Approved by Contractor			Reconstruction and Modernisation of HPP Perucica - Phase II	epcg	SINTAKSA A Voith Company Sintaksa - A Voith Company Ulica Domovinskog rata 104Ç, 21 000 Split, Hrvatska	Unit KA1 control cubicle circuit diagrams	DRAWING No.:	REV No.:	= UACJA10GH100
Approved by Designer	Grga Kolić	15.6.2026.					PERU-01-19-170-31-001	02	+ UACJA10
Checked by	Antonio Aleksić	15.6.2026.				SPEED MEASUREMENT	Designer No.:	SALES No.:	PAGE 48
Drawn by	Tamara Trogrlić	15.6.2026.	PROJECT NAME	EMPLOYER	DESIGNER				PAGE 48 / 156

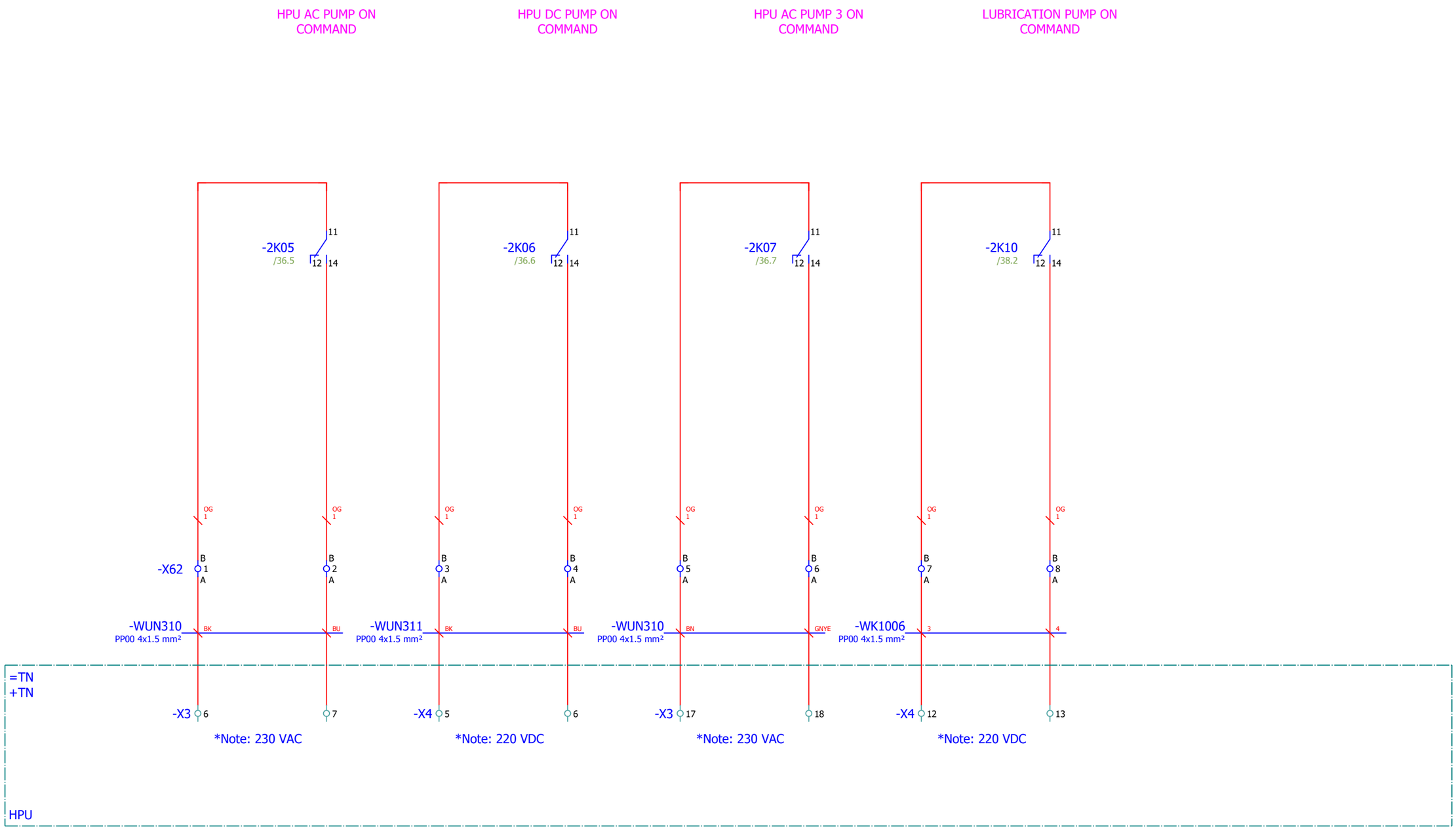

CONFIDENTIAL, ALL RIGHTS RESERVED DIN 34

Format ISO/DIN A3

48

50

Approved by Contractor			Reconstruction and Modernisation of HPP Perucica - Phase II	epcg	SINTAKSA A Voith Company Sintaksa - A Voith Company Ulica Domovinskog rata 104C, 21 000 Split, Hrvatska	Unit KA1 control cubicle circuit diagrams	DRAWING No.:	REV No.:	= UACJA10GH100
Approved by Designer	Grga Kolić	15.6.2026.					PERU-01-19-170-31-001	02	+ UACJA10
Checked by	Antonio Aleksić	15.6.2026.				HPU CONTROL	Designer No.:	SALES No.:	PAGE 49
Drawn by	Tamara Trogrlić	15.6.2026.	PROJECT NAME	EMPLOYER	DESIGNER				PAGE 49 / 156

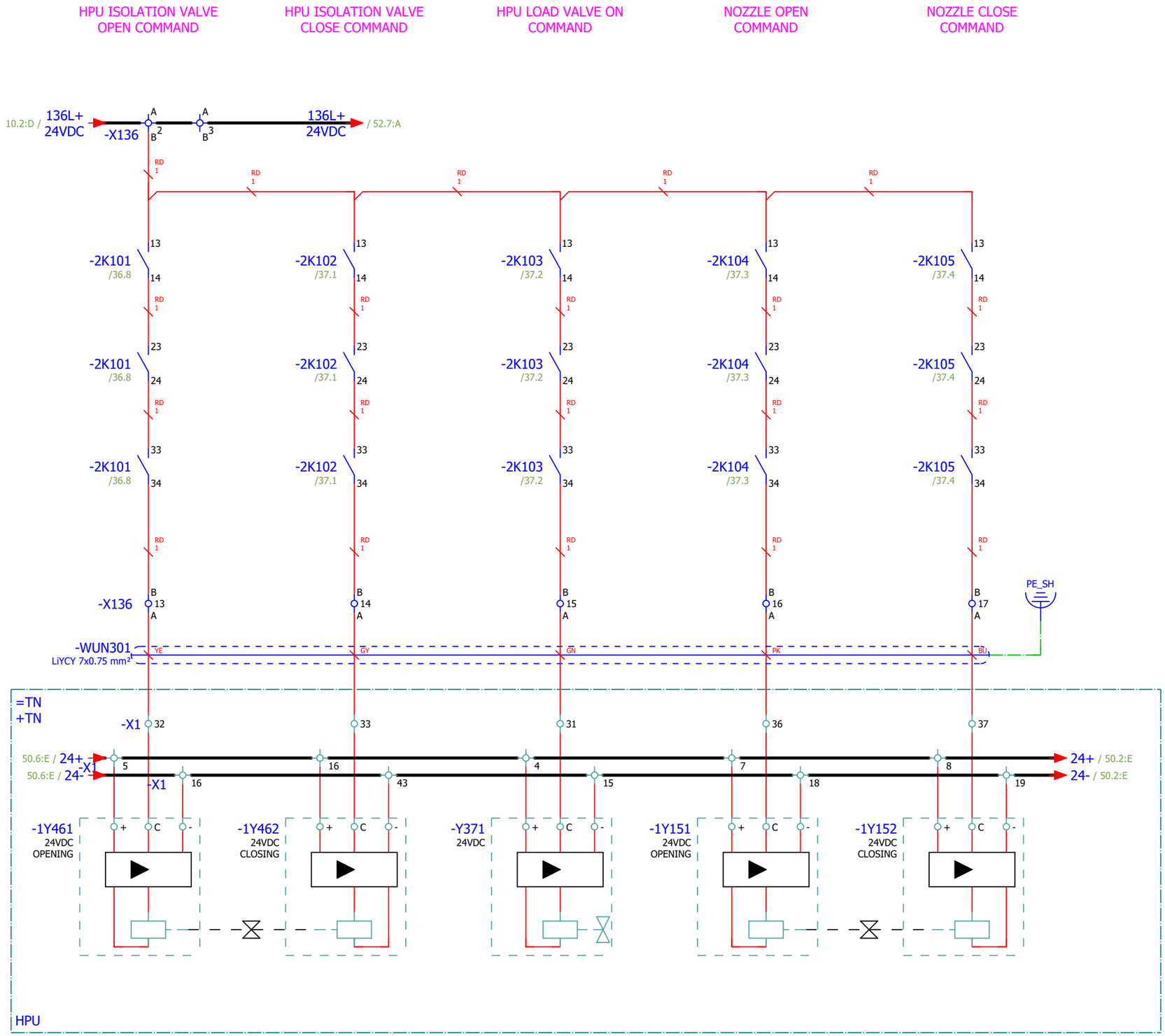

CONFIDENTIAL, ALL RIGHTS RESERVED DIN 34

Format ISO/DIN A3

Approved by Contractor			Reconstruction and Modernisation of HPP Perucica - Phase II	epcg	SINTAKSA A Voith Company	Unit KA1 control cubicle circuit diagrams	DRAWING No.:	REV No.:	= UACJA10GH100
Approved by Designer	Grga Kolić	15.6.2026.			Sintaksa - A Voith Company Ulica Domovinskog rata 104C, 21 000 Split, Hrvatska		PERU-01-19-170-31-001	02	+ UACJA10
Checked by	Antonio Aleksić	15.6.2026.				HPU CONTROL	Designer No.:	SALES No.:	PAGE 50
Drawn by	Tamara Trogrlić	15.6.2026.	PROJECT NAME	EMPLOYER	DESIGNER				PAGE 50 / 156

CONFIDENTIAL, ALL RIGHTS RESERVED DIN 34

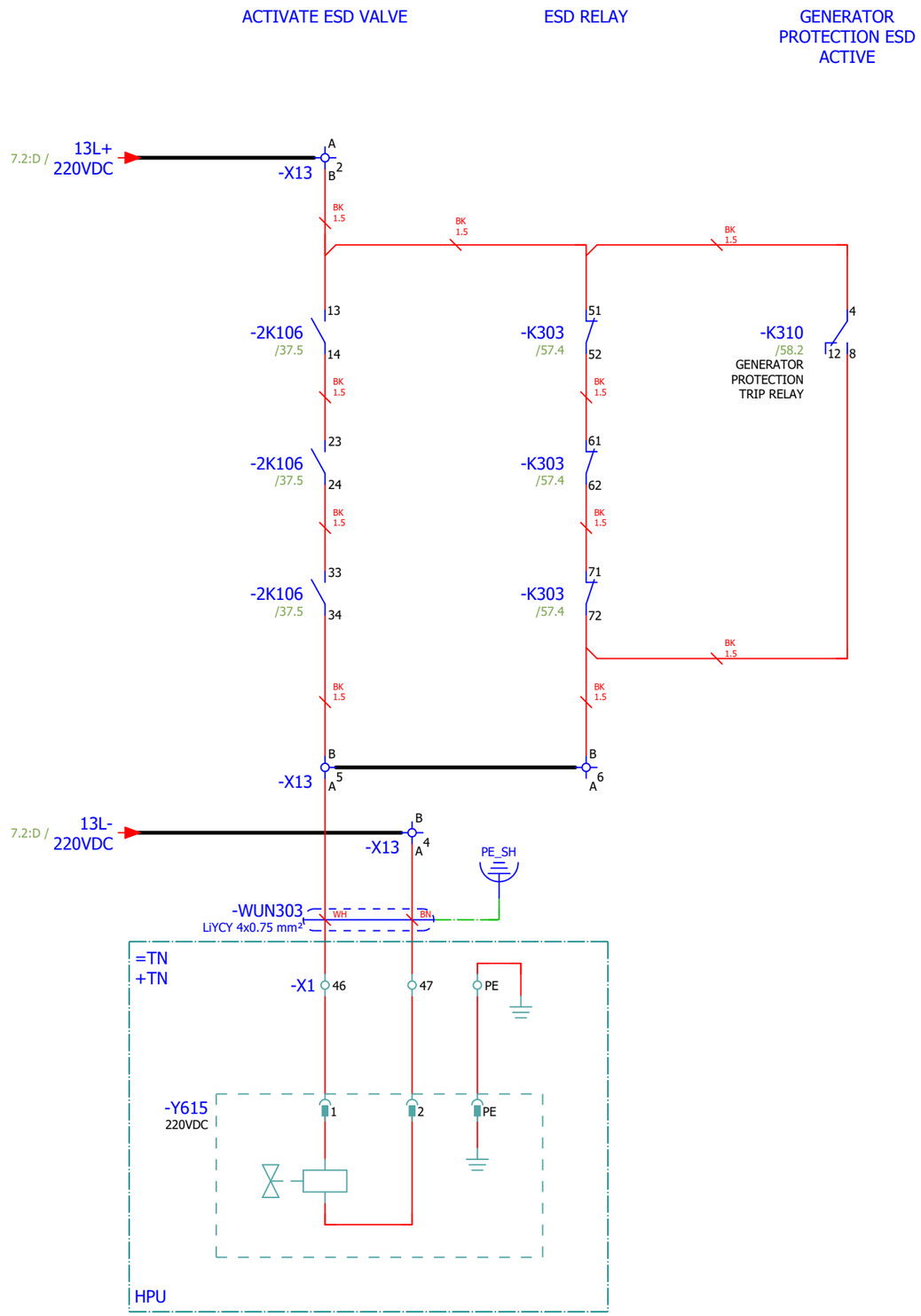

Approved by Contractor			Reconstruction and Modernisation of HPP Perucica - Phase II	epcg	SINTAKSA A Voith Company Sintaksa - A Voith Company Ulica Domovinskog rata 104C, 21 000 Split, Hrvatska	Unit KA1 control cubicle circuit diagrams	DRAWING No.:	REV No.:	= UACJA10GH100
Approved by Designer	Grga Kolić	15.6.2026.					PERU-01-19-170-31-001	02	+ UACJA10
Checked by	Antonio Aleksić	15.6.2026.				ESD VALVE CONTROL	Designer No.:	SALES No.:	PAGE 51
Drawn by	Tamara Trogrlić	15.6.2026.	PROJECT NAME	EMPLOYER	DESIGNER				PAGE 51 / 156

Format ISO/DIN A3

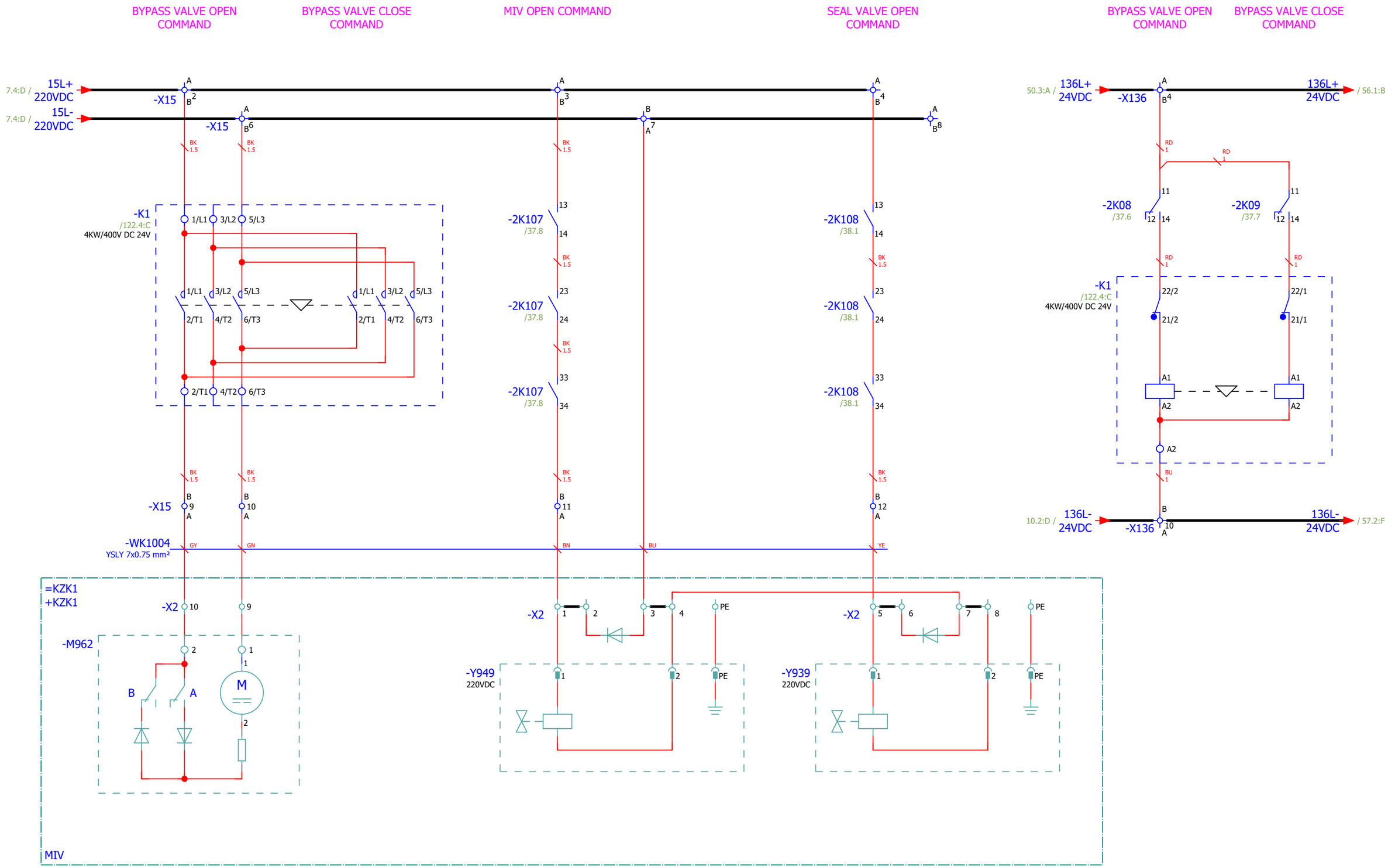

CONFIDENTIAL, ALL RIGHTS RESERVED DIN 34

Format ISO/DIN A3

Approved by Contractor			Reconstruction and Modernisation of HPP Perucica - Phase II	epcg	SINTAKSA A Voith Company	Unit KA1 control cubicle circuit diagrams	DRAWING No.: PERU-01-19-170-31-001	REV No.: 02	= UACJA10GH100
Approved by Designer	Grga Kolić	15.6.2026.			Sintaksa - A Voith Company, Ulica Domovinskog rata 104C, 21 000 Split, Hrvatska				+ UACJA10
Checked by	Antonio Aleksić	15.6.2026.				MIV CONTROL 24VDC	Designer No.:	SALES No.:	PAGE 52
Drawn by	Tamara Trogrlić	15.6.2026.	PROJECT NAME	EMPLOYER	DESIGNER				PAGE 52 / 156

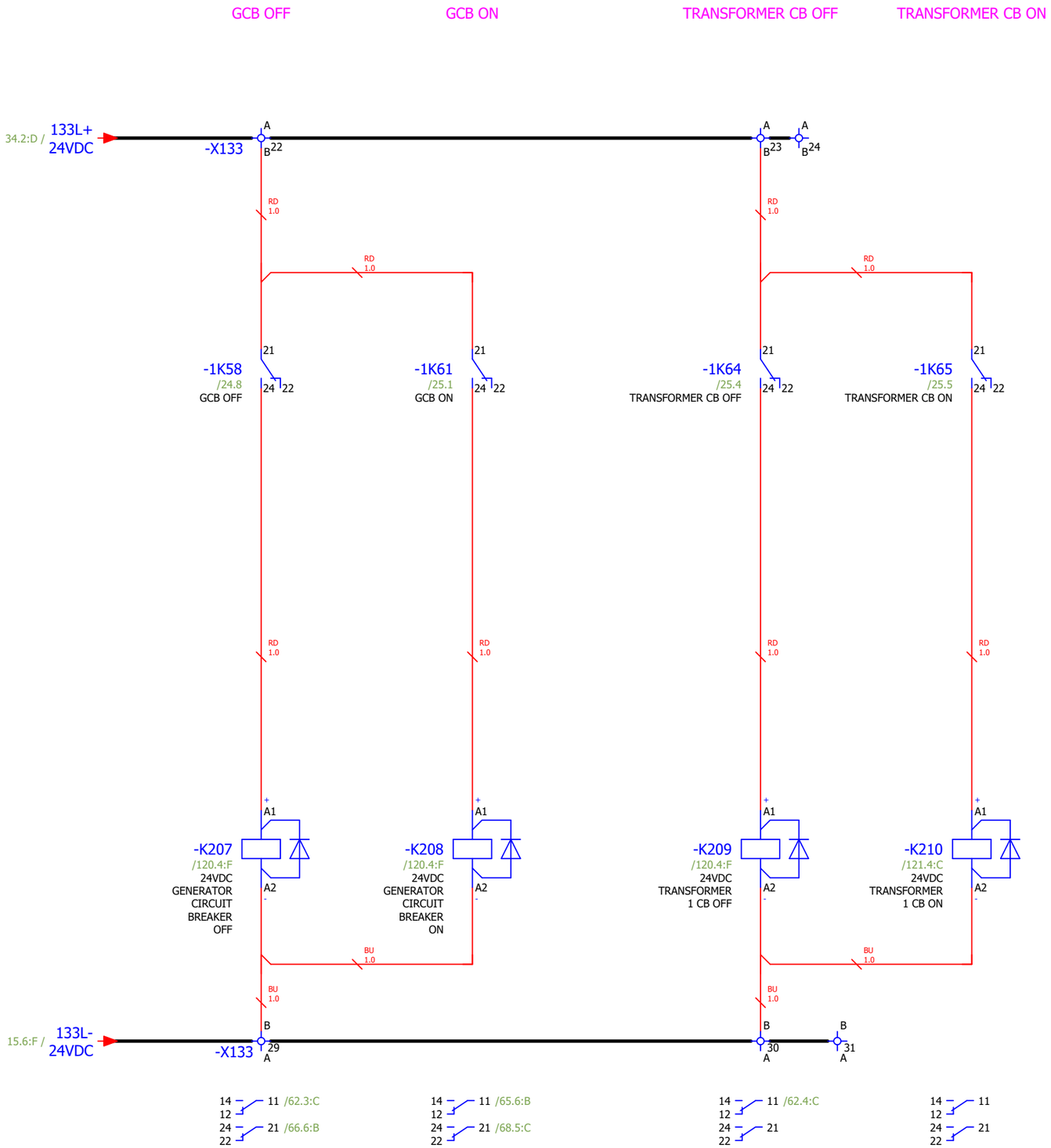

CONFIDENTIAL, ALL RIGHTS RESERVED DIN 34

Format ISO/DIN A3

52

54

Approved by Contractor			Reconstruction and Modernisation of HPP Perucica - Phase II	epcg	SINTAKSA A Voith Company Sintaksa - A Voith Company Ulica Domovinskog rata 104C, 21 000 Split, Hrvatska	Unit KA1 control cubicle circuit diagrams LOCAL CONTROL	DRAWING No.: PERU-01-19-170-31-001	REV No.: 02	= UACJA10GH100
Approved by Designer	Grga Kolić	15.6.2026.							+ UACJA10
Checked by	Antonio Aleksić	15.6.2026.					Designer No.:	SALES No.:	PAGE 53
Drawn by	Tamara Trogrlić	15.6.2026.	PROJECT NAME	EMPLOYER	DESIGNER				PAGE 53 / 156

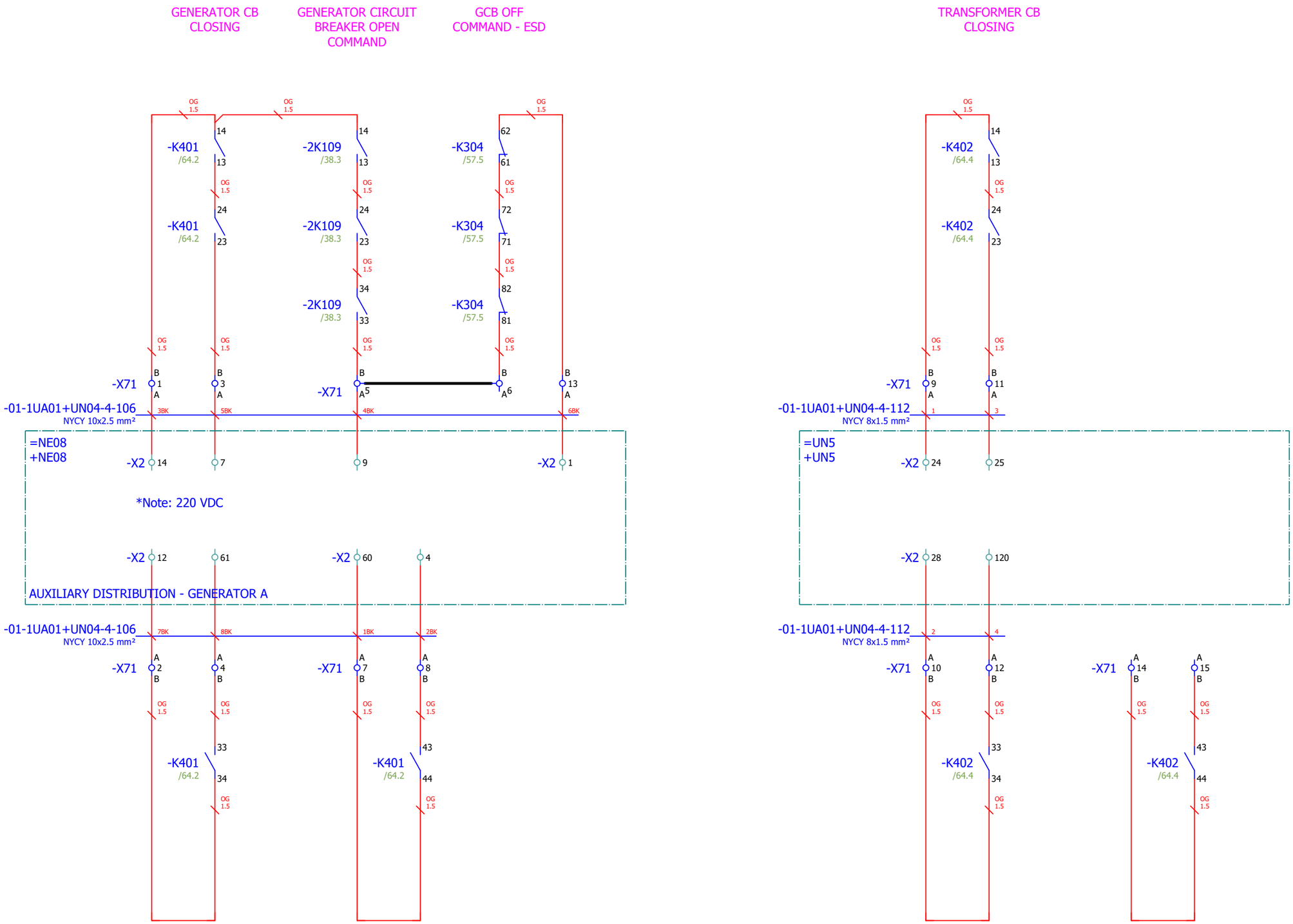

CONFIDENTIAL, ALL RIGHTS RESERVED DIN 34

Format ISO/DIN A3

Approved by Contractor			Reconstruction and Modernisation of HPP Perucica - Phase II	epcg	SINTAKSA A Voith Company Sintaksa - A Voith Company Ulica Domovinskog rata 104C, 21 000 Split, Hrvatska	Unit KA1 control cubicle circuit diagrams	DRAWING No.:	REV No.:	= UACJA10GH100
Approved by Designer	Grga Kolić	15.6.2026.					PERU-01-19-170-31-001	02	+ UACJA10
Checked by	Antonio Aleksić	15.6.2026.				CB CONTROL	Designer No.:	SALES No.:	PAGE 54
Drawn by	Tamara Trogrlić	15.6.2026.	PROJECT NAME	EMPLOYER	DESIGNER				PAGE 54 / 156

CONFIDENTIAL, ALL RIGHTS RESERVED DIN 34

Format ISO/DIN A3

ECB OFF COMMAND
- ESD

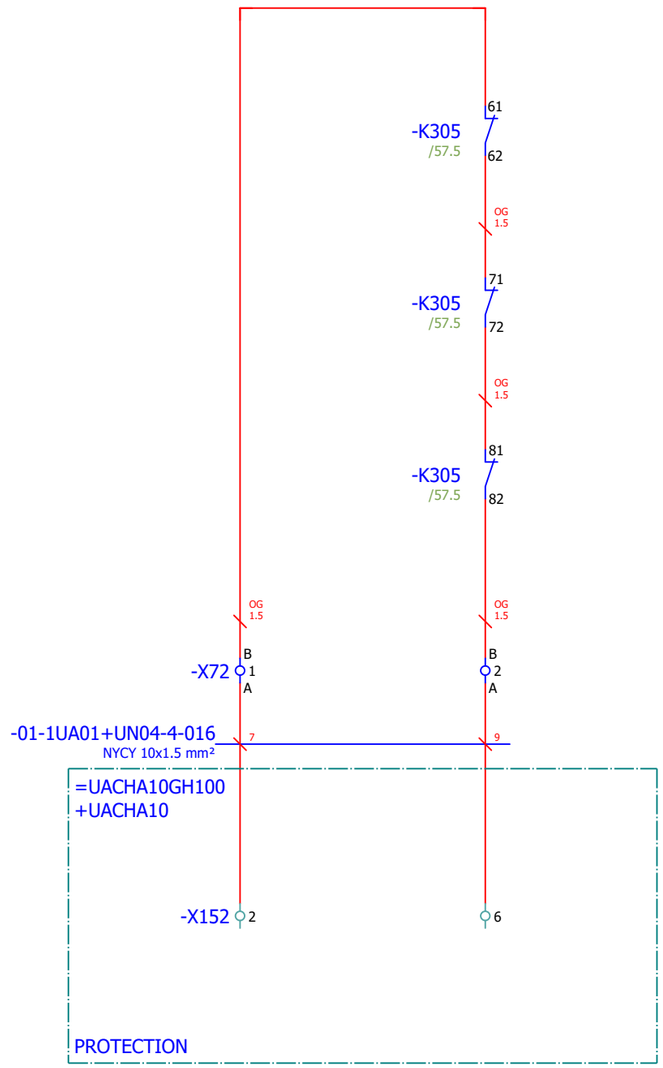

ESD OFF COMMAND
ESD FEEDBACK

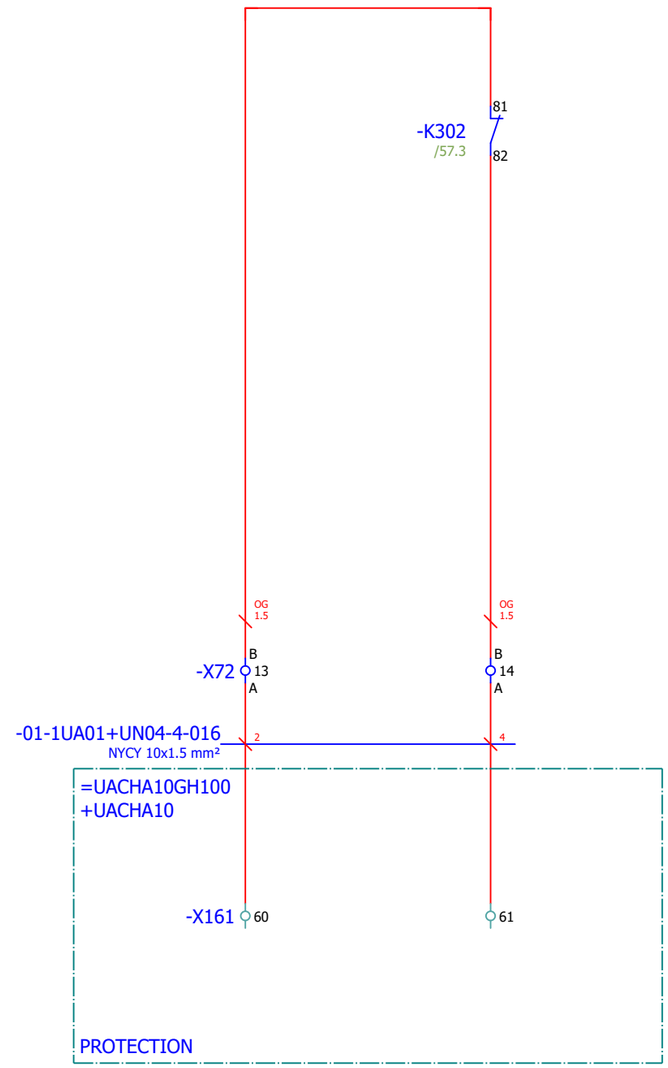

54

56

Approved by Contractor			Reconstruction and Modernisation of HPP Perucica - Phase II	epcg	SINTAKSA A Voith Company Sintaksa - A Voith Company Ulica Domovinskog rata 104Ç, 21 000 Split, Hrvatska	Unit KA1 control cubicle circuit diagrams	DRAWING No.:	REV No.:	= UACJA10GH100
Approved by Designer	Grga Kolić	15.6.2026.					PERU-01-19-170-31-001	02	+ UACJA10
Checked by	Antonio Aleksić	15.6.2026.				EXCITATION CB TRIP COMMAND	Designer No.:	SALES No.:	PAGE 55
Drawn by	Tamara Trogrlić	15.6.2026.	PROJECT NAME	EMPLOYER	DESIGNER				PAGE 55 / 156

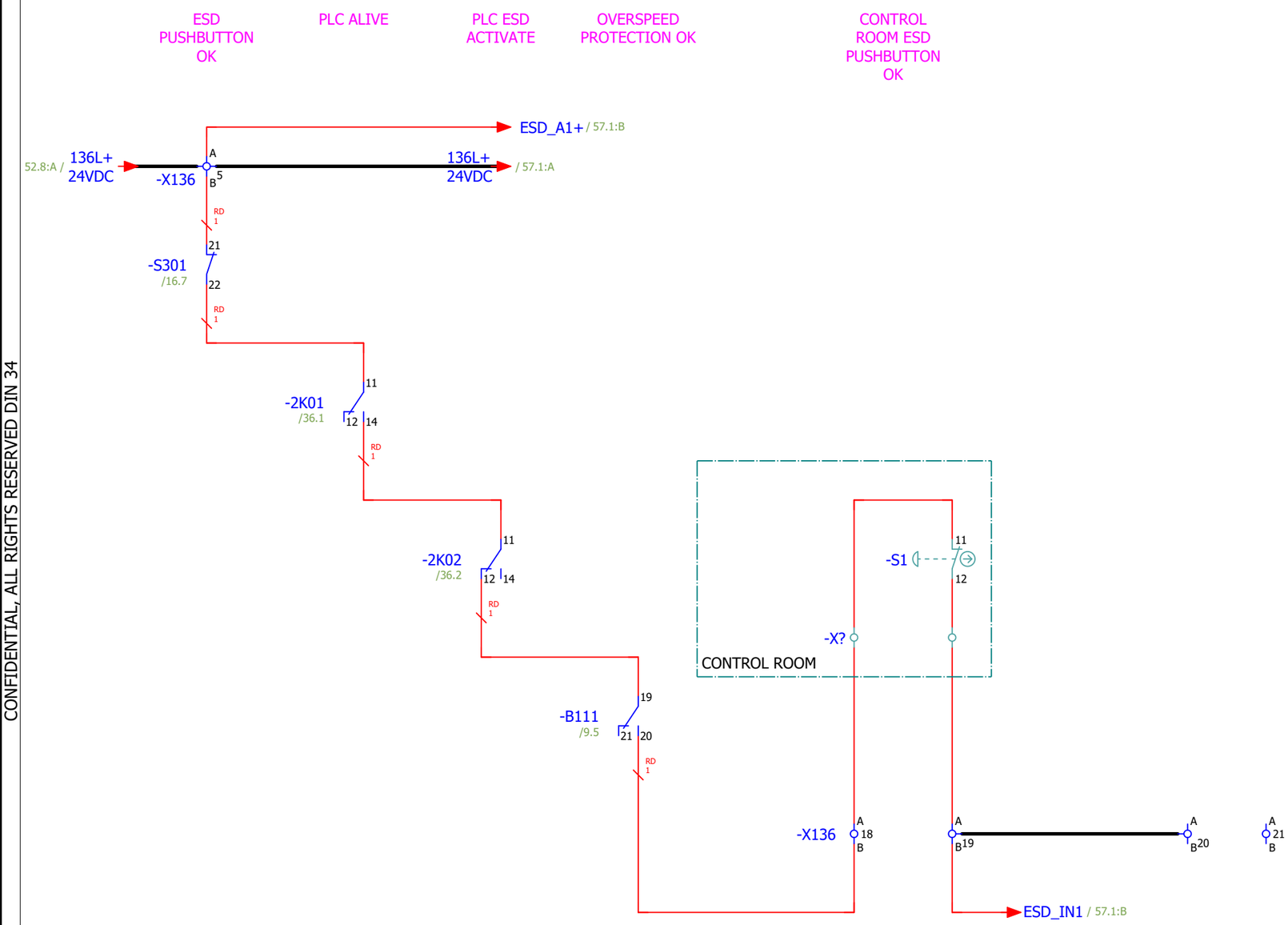

CONFIDENTIAL, ALL RIGHTS RESERVED DIN 34

Format ISO/DIN A3

55

57

Approved by Contractor			Reconstruction and Modernisation of HPP Perucica - Phase II	epcg	SINTAKSA A Voith Company Sintaksa - A Voith Company Ulica Domovinskog rata 104C, 21 000 Split, Hrvatska	Unit KA1 control cubicle circuit diagrams	DRAWING No.:	REV No.:	= UACJA10GH100
Approved by Designer	Grga Kolić	15.6.2026.					PERU-01-19-170-31-001	02	+ UACJA10
Checked by	Antonio Aleksić	15.6.2026.				EMERGENCY SHUTDOWN	Designer No.:	SALES No.:	PAGE 56
Drawn by	Tamara Trogrlić	15.6.2026.	PROJECT NAME	EMPLOYER	DESIGNER				PAGE 56 / 156

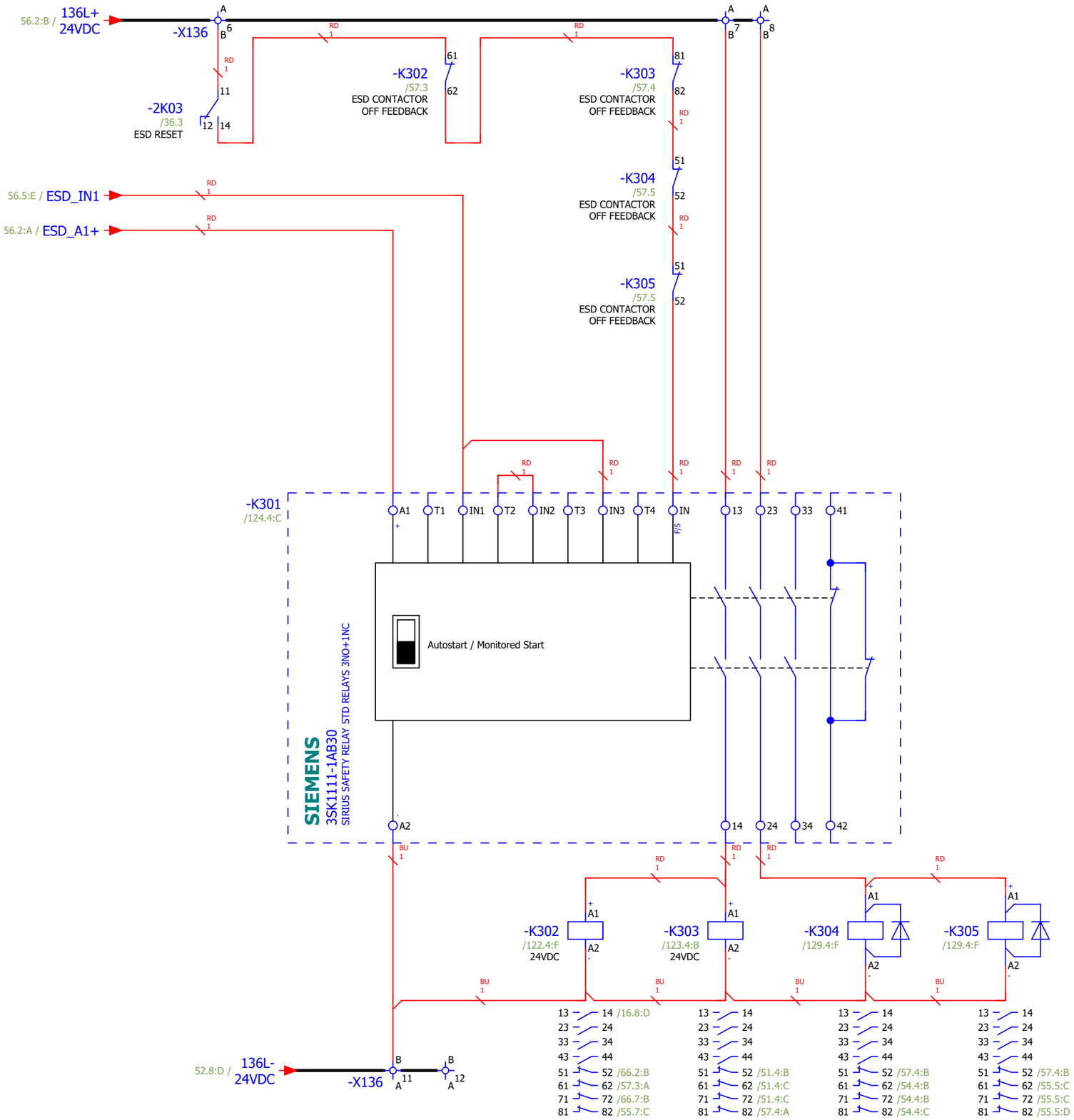

CONFIDENTIAL, ALL RIGHTS RESERVED DIN 34

Format ISO/DIN A3

Approved by Contractor			Reconstruction and Modernisation of HPP Perucica - Phase II	epcg	SINTAKSA A Voith Company	Unit KA1 control cubicle circuit diagrams	DRAWING No.:	REV No.:	= UACJA10GH100
Approved by Designer	Grga Kolić	15.6.2026.			Sintaksa - A Voith Company Ulica Domovinskog rata 104C, 21 000 Split, Hrvatska		PERU-01-19-170-31-001	02	+ UACJA10
Checked by	Antonio Aleksić	15.6.2026.				EMERGENCY SHUTDOWN	Designer No.:	SALES No.:	PAGE 57
Drawn by	Tamara Trogrlić	15.6.2026.	PROJECT NAME	EMPLOYER	DESIGNER				PAGE 57 / 156

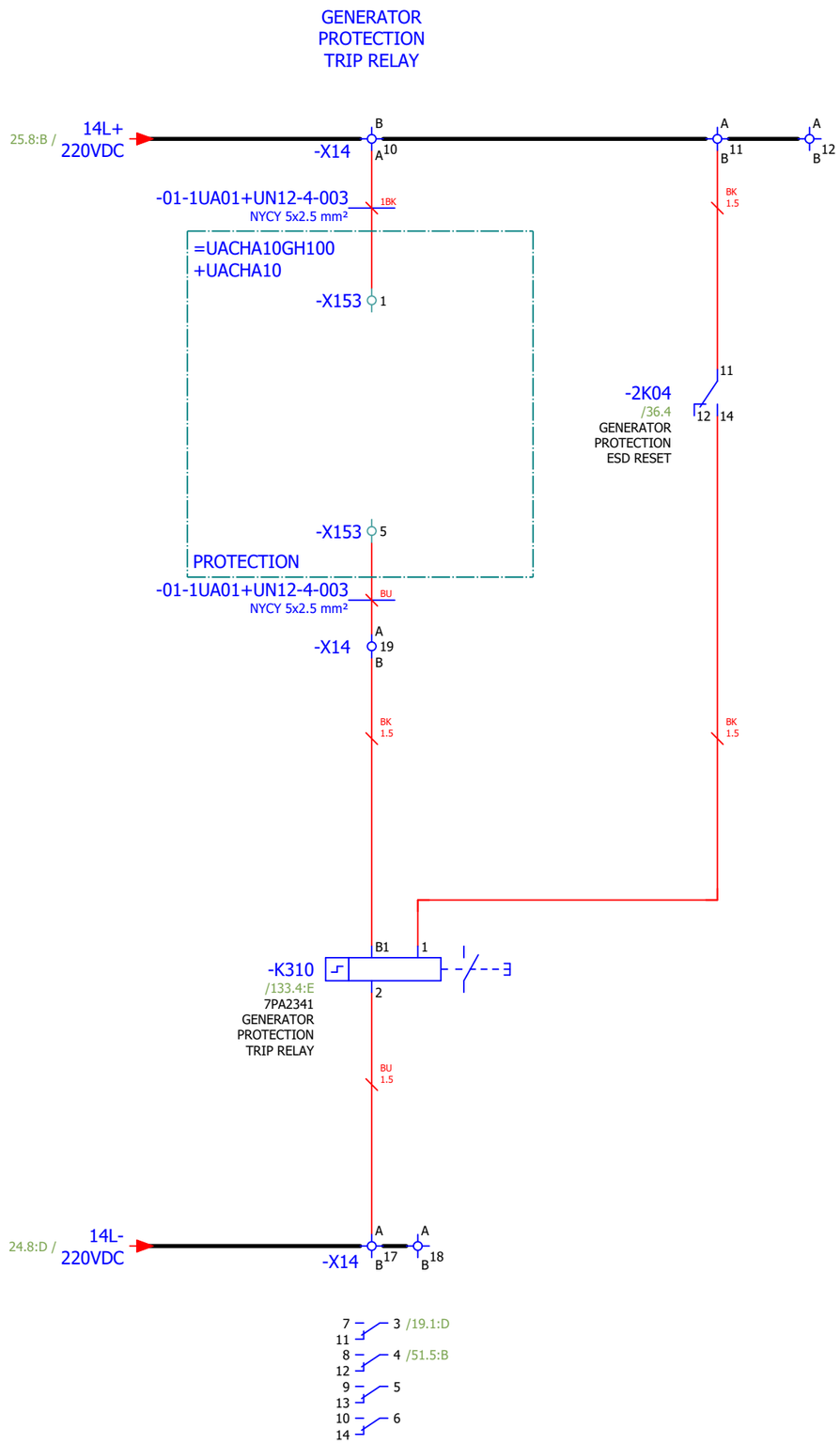

CONFIDENTIAL, ALL RIGHTS RESERVED DIN 34

Format ISO/DIN A3

57

59

Approved by Contractor			Reconstruction and Modernisation of HPP Perucica - Phase II	epcg	SINTAKSA A Voith Company Sintaksa - A Voith Company Ulica Domovinskog rata 104C, 21 000 Split, Hrvatska	Unit KA1 control cubicle circuit diagrams GENERATOR PROTECTION ESD	DRAWING No.: PERU-01-19-170-31-001	REV No.: 02	= UACJA10GH100 + UACJA10
Approved by Designer	Grga Kolić	15.6.2026.							
Checked by	Antonio Aleksić	15.6.2026.					Designer No.:	SALES No.:	PAGE 58
Drawn by	Tamara Trogrlić	15.6.2026.	PROJECT NAME	EMPLOYER	DESIGNER				PAGE 58 / 156

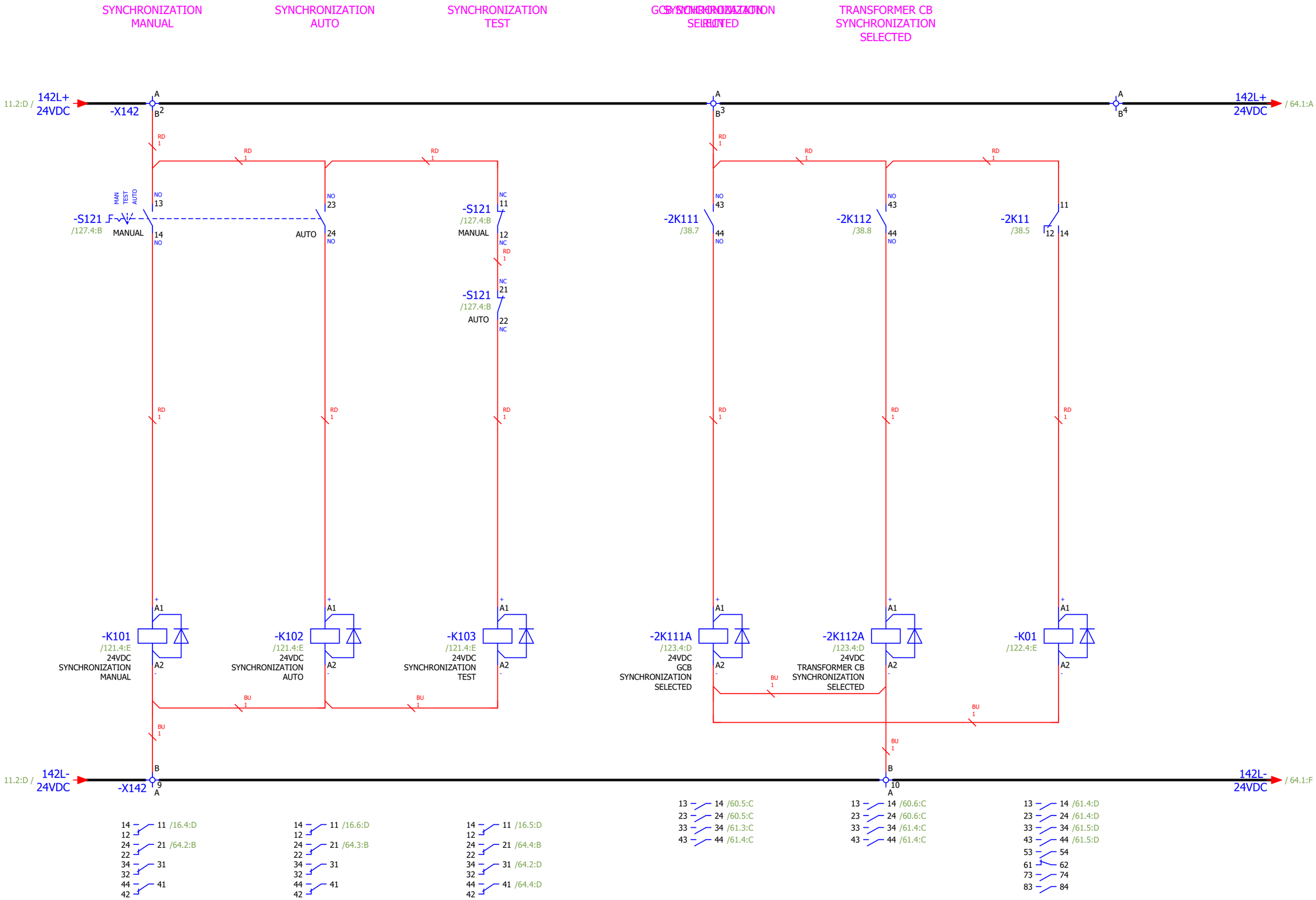

CONFIDENTIAL, ALL RIGHTS RESERVED DIN 34

Format ISO/DIN A3

58

60

Approved by Contractor			Reconstruction and Modernisation of HPP Perucica - Phase II	epcg	SINTAKSA A Voith Company Sintaksa - A Voith Company Ulica Domovinskog rata 104C, 21 000 Split, Hrvatska	Unit KA1 control cubicle circuit diagrams	DRAWING No.:	REV No.:	= UACJA10GH100
Approved by Designer	Grga Kolić	15.6.2026.					PERU-01-19-170-31-001	02	+ UACJA10
Checked by	Antonio Aleksić	15.6.2026.				SYNCHRONIZATION CONTROL	Designer No.:	SALES No.:	PAGE 59
Drawn by	Tamara Trogrlić	15.6.2026.	PROJECT NAME	EMPLOYER	DESIGNER				PAGE 59 / 156

SYNCHRONIZER
VOLTAGE MEASUREMENT

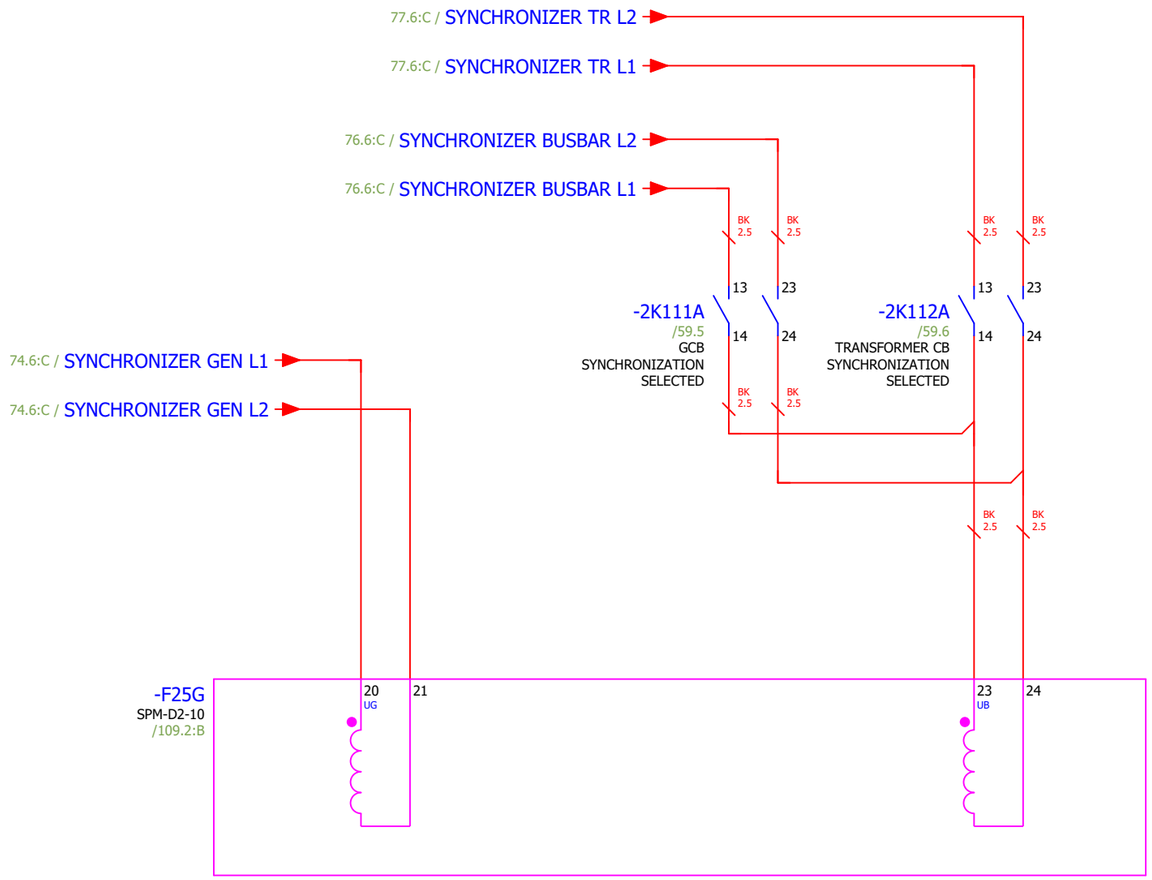

CONFIDENTIAL, ALL RIGHTS RESERVED DIN 34

Format ISO/DIN A3

59

61

Approved by Contractor			Reconstruction and Modernisation of HPP Perucica - Phase II	epcg	SINTAKSA A Voith Company Sintaksa - A Voith Company Ulica Domovinskog rata 104C, 21 000 Split, Hrvatska	Unit KA1 control cubicle circuit diagrams	DRAWING No.:	REV No.:	= UACJA10GH100
Approved by Designer	Grga Kolić	15.6.2026.					PERU-01-19-170-31-001	02	+ UACJA10
Checked by	Antonio Aleksić	15.6.2026.				SYNCHRONIZATION CONTROL	Designer No.:	SALES No.:	PAGE 60
Drawn by	Tamara Trogrlić	15.6.2026.	PROJECT NAME	EMPLOYER	DESIGNER				PAGE 60 / 156

SYNCHROCHECK
VOLTAGE MEASUREMENT

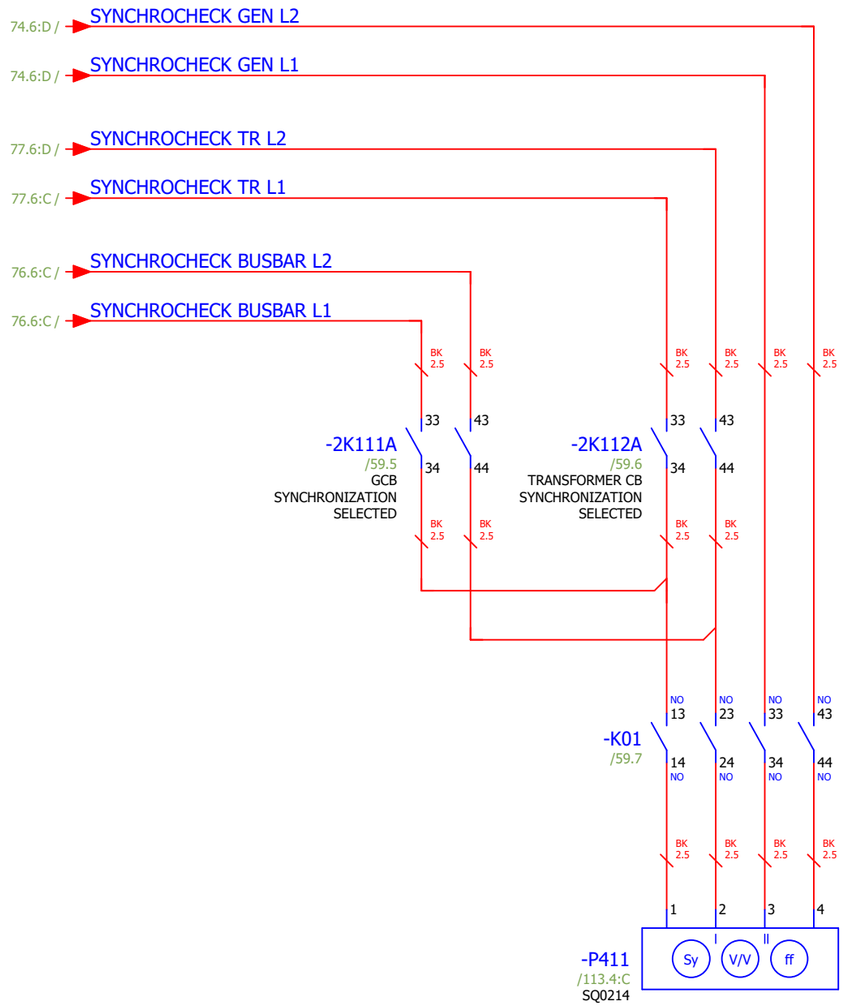

CONFIDENTIAL, ALL RIGHTS RESERVED DIN 34

Format ISO/DIN A3

60

62

Approved by Contractor			Reconstruction and Modernisation of HPP Perucica - Phase II	epcg	SINTAKSA A Voith Company Sintaksa - A Voith Company Ulica Domovinskog rata 104C, 21 000 Split, Hrvatska	Unit KA1 control cubicle circuit diagrams	DRAWING No.: PERU-01-19-170-31-001	REV No.: 02	= UACJA10GH100 + UACJA10
Approved by Designer	Grga Kolić	15.6.2026.				SYNCHRONIZATION	Designer No.:	SALES No.:	PAGE 61
Checked by	Antonio Aleksić	15.6.2026.							PAGE 61 / 156
Drawn by	Tamara Trogrlić	15.6.2026.	PROJECT NAME	EMPLOYER	DESIGNER				

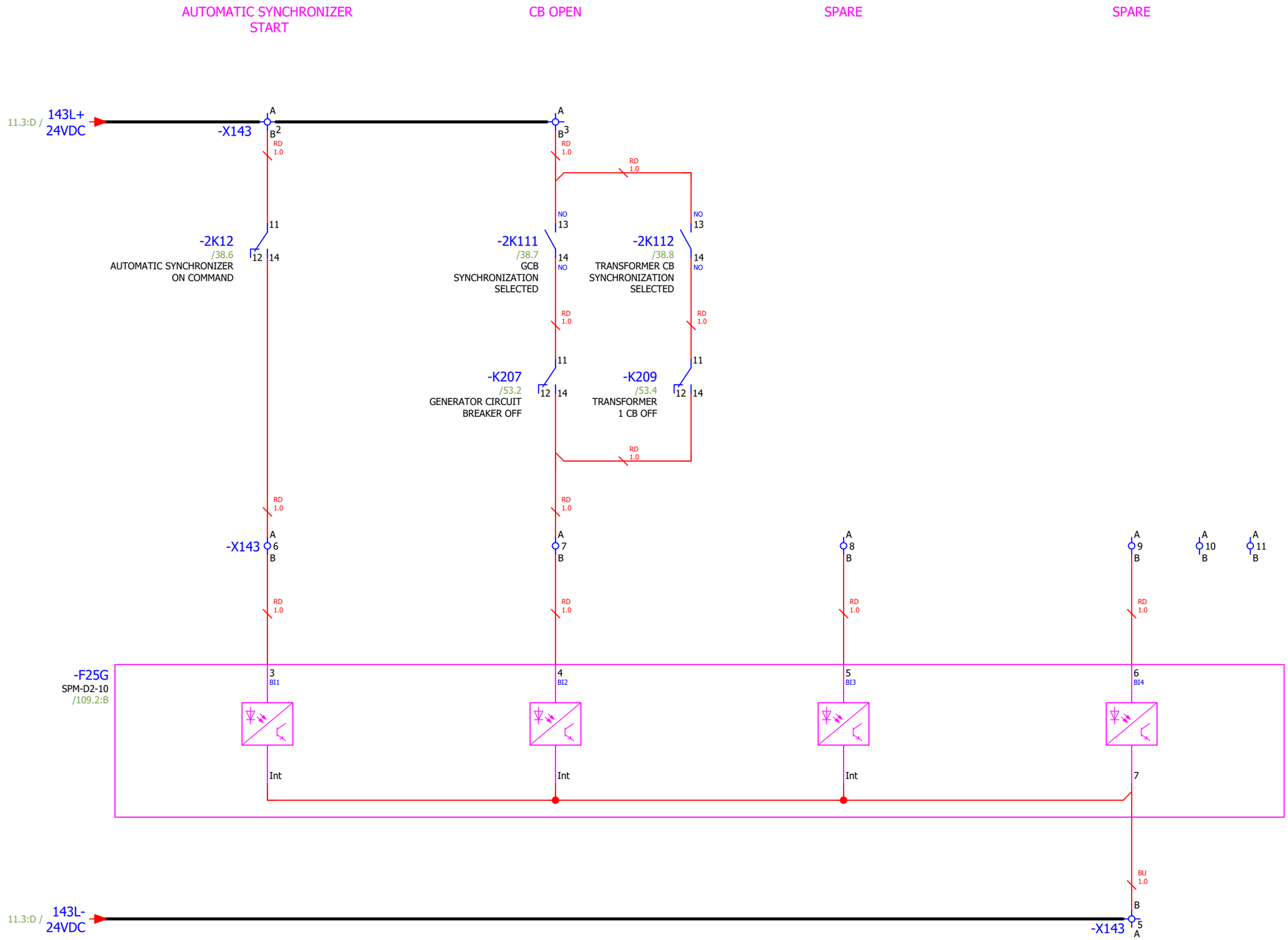

CONFIDENTIAL, ALL RIGHTS RESERVED DIN 34

Format ISO/DIN A3

Approved by Contractor			Reconstruction and Modernisation of HPP Perucica - Phase II	epcg	SINTAKSA A Voith Company Sintaksa - A Voith Company Ulica Domovinskog rata 104C, 21 000 Split, Hrvatska	Unit KA1 control cubicle circuit diagrams	DRAWING No.:	REV No.:	= UACJA10GH100
Approved by Designer	Grga Kolić	15.6.2026.					PERU-01-19-170-31-001	02	+ UACJA10
Checked by	Antonio Aleksić	15.6.2026.				SYNCHRONIZATION	Designer No.:	SALES No.:	PAGE 62
Drawn by	Tamara Trogrlić	15.6.2026.	PROJECT NAME	EMPLOYER	DESIGNER				PAGE 62 / 156

CONFIDENTIAL, ALL RIGHTS RESERVED DIN 34

Format ISO/DIN A3

EXCITATION SETPOINT
LOWER/HIGHER

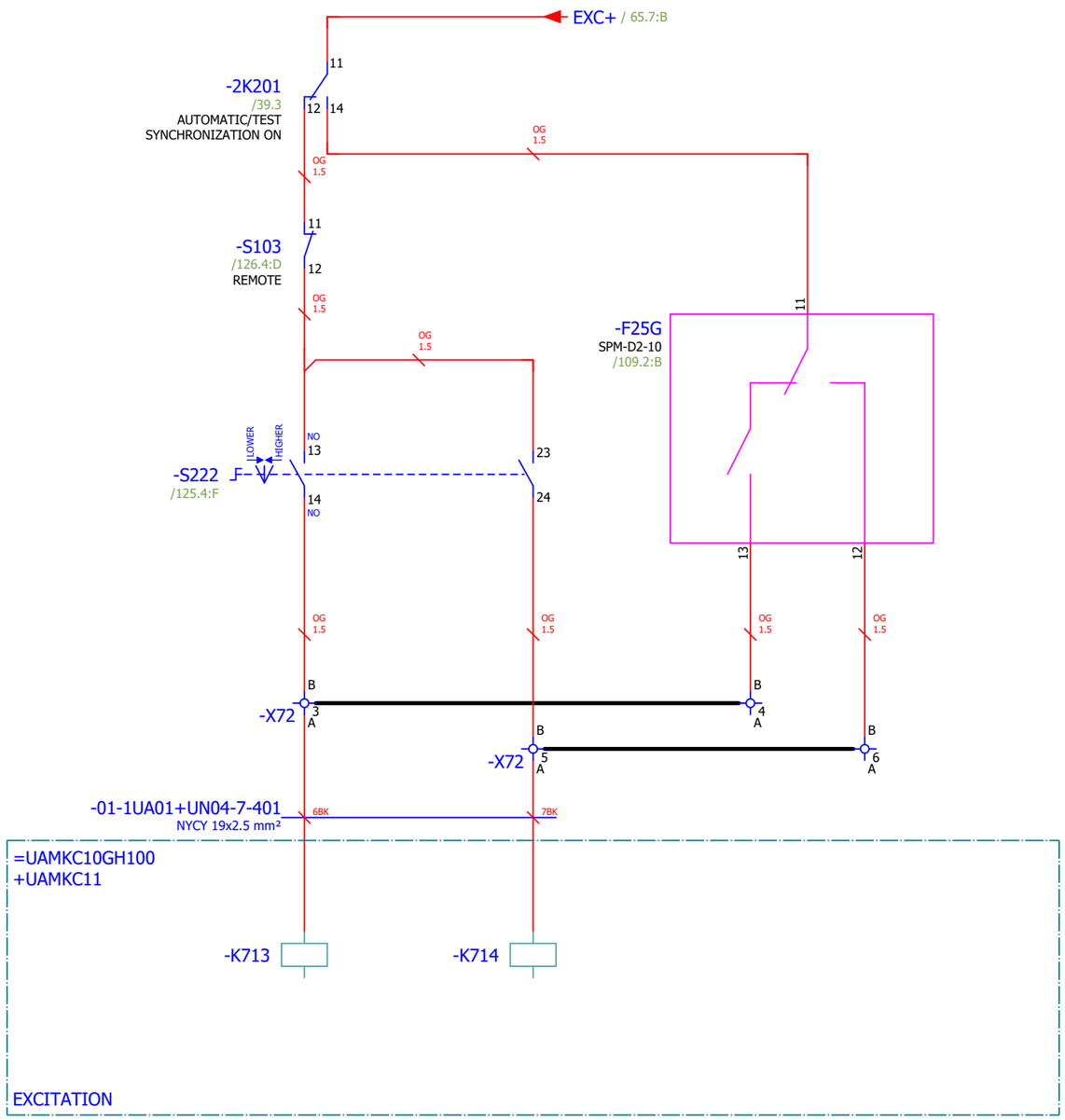

TURBINE GOVERNOR SETPOINT
LOWER/HIGHER

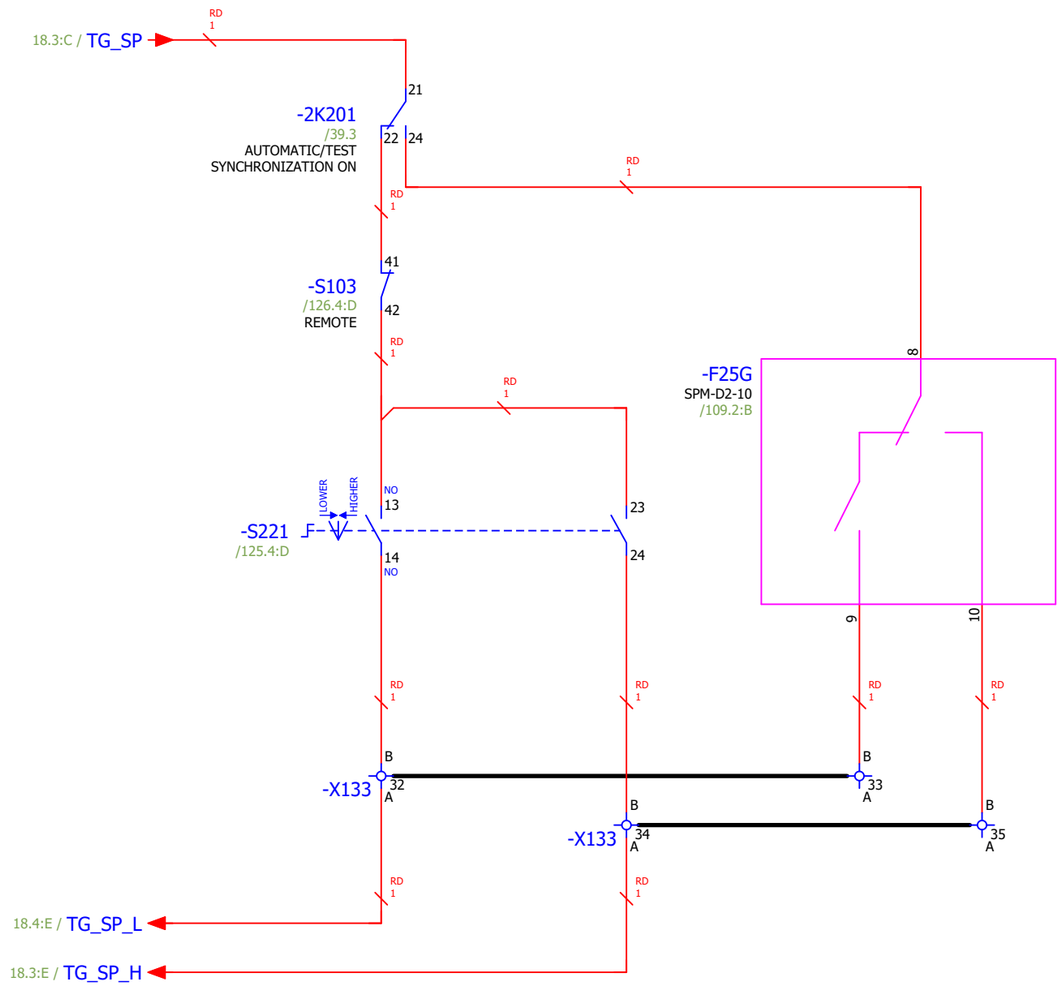

Approved by Contractor			Reconstruction and Modernisation of HPP Perucica - Phase II	epcg	SINTAKSA A Voith Company Sintaksa - A Voith Company Ulica Domovinskog rata 104C, 21 000 Split, Hrvatska	Unit KA1 control cubicle circuit diagrams	DRAWING No.: PERU-01-19-170-31-001	REV No.: 02	= UACJA10GH100 + UACJA10
Approved by Designer	Grga Kolić	15.6.2026.				SYNCHRONIZATION	Designer No.:	SALES No.:	PAGE 63
Checked by	Antonio Aleksić	15.6.2026.							PAGE 63 / 156
Drawn by	Tamara Trogrlić	15.6.2026.	PROJECT NAME	EMPLOYER	DESIGNER				

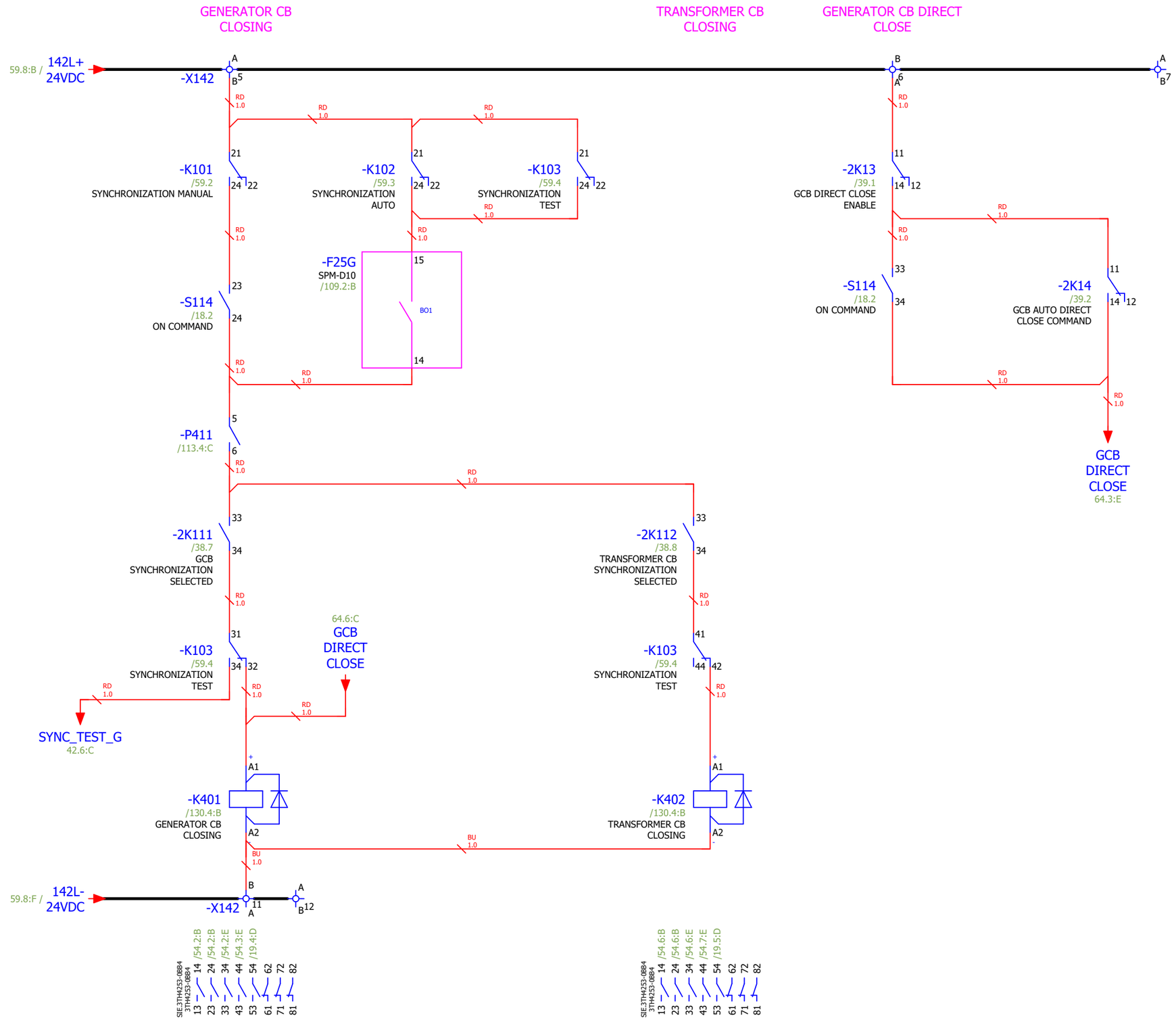

CONFIDENTIAL, ALL RIGHTS RESERVED DIN 34

Format ISO/DIN A3

Approved by Contractor			Reconstruction and Modernisation of HPP Perucica - Phase II	epcg	SINTAKSA A Voith Company	Unit KA1 control cubicle circuit diagrams	DRAWING No.:	REV No.:	= UACJA10GH100
Approved by Designer	Grga Kolić	15.6.2026.			Sintaksa - A Voith Company Ulica Domovinskog rata 104Ç, 21 000 Split, Hrvatska		PERU-01-19-170-31-001	02	+ UACJA10
Checked by	Antonio Aleksić	15.6.2026.				SYNCHRONIZATION	Designer No.:	SALES No.:	PAGE 64
Drawn by	Tamara Trogrlić	15.6.2026.	PROJECT NAME	EMPLOYER	DESIGNER				PAGE 64 / 156

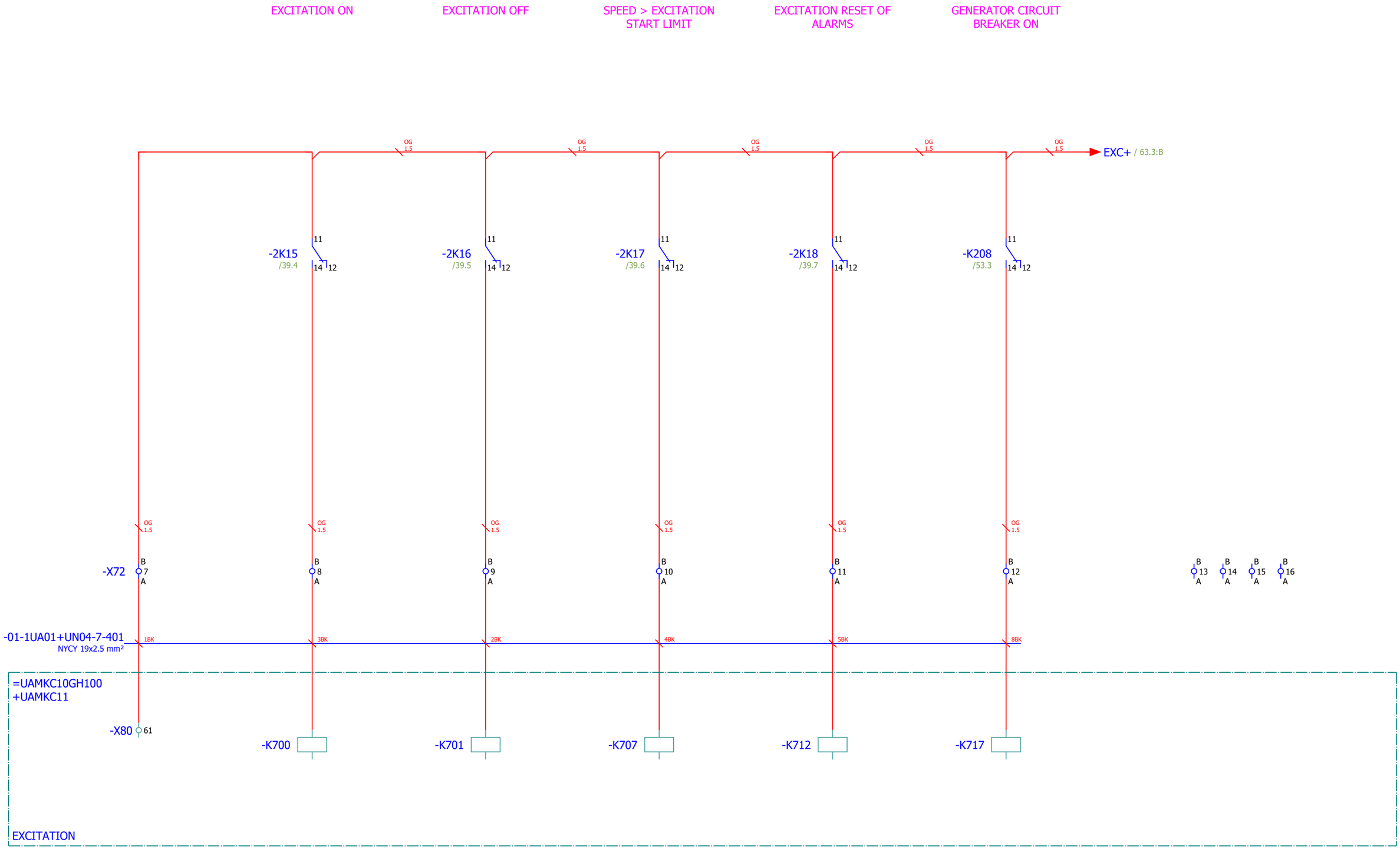

CONFIDENTIAL, ALL RIGHTS RESERVED DIN 34

Format ISO/DIN A3

64

66

Approved by Contractor			Reconstruction and Modernisation of HPP Perucica - Phase II	epcg	SINTAKSA A Voith Company Sintaksa - A Voith Company Ulica Domovinskog rata 104Ç, 21 000 Split, Hrvatska	Unit KA1 control cubicle circuit diagrams SIGNALIZATION - EXCITATION	DRAWING No.: PERU-01-19-170-31-001	REV No.: 02	= UACJA10GH100 + UACJA10
Approved by Designer	Grga Kolić	15.6.2026.					Designer No.:	SALES No.:	PAGE 65
Checked by	Antonio Aleksić	15.6.2026.							PAGE 65 / 156
Drawn by	Tamara Trogrlić	15.6.2026.	PROJECT NAME	EMPLOYER	DESIGNER				

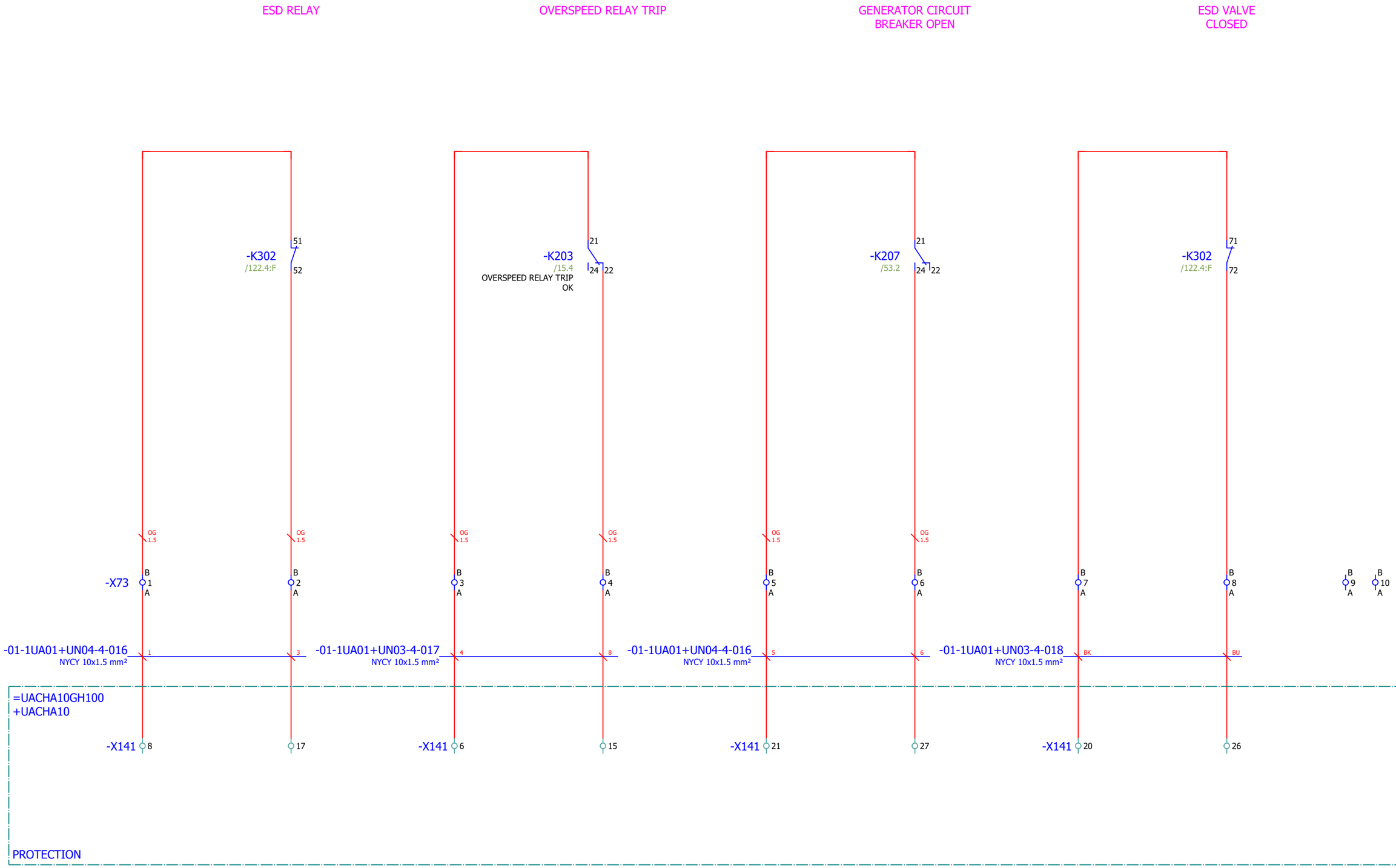

CONFIDENTIAL, ALL RIGHTS RESERVED DIN 34

Format ISO/DIN A3

65

67

Approved by Contractor			Reconstruction and Modernisation of HPP Perucica - Phase II	epcg	SINTAKSA A Voith Company Sintaksa - A Voith Company Ulica Domovinskog rata 104Ç, 21 000 Split, Hrvatska	Unit KA1 control cubicle circuit diagrams	DRAWING No.:	REV No.:	= UACJA10GH100
Approved by Designer	Grga Kolić	15.6.2026.					PERU-01-19-170-31-001	02	+ UACJA10
Checked by	Antonio Aleksić	15.6.2026.				SIGNALIZATION - PROTECTION	Designer No.:	SALES No.:	PAGE 66
Drawn by	Tamara Trogrlić	15.6.2026.	PROJECT NAME	EMPLOYER	DESIGNER				PAGE 66 / 156

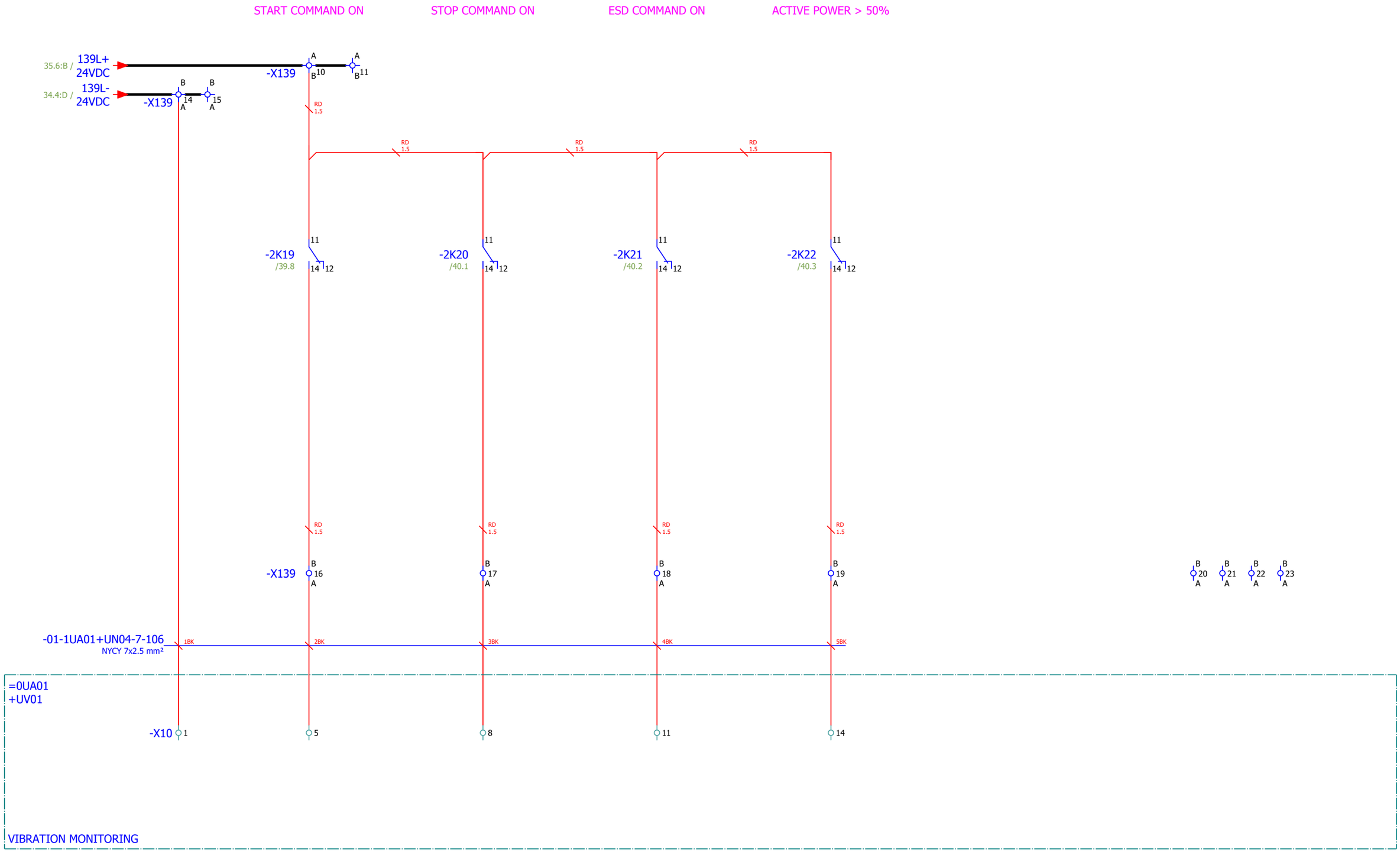

CONFIDENTIAL, ALL RIGHTS RESERVED DIN 34

Format ISO/DIN A3

Approved by Contractor			Reconstruction and Modernisation of HPP Perucica - Phase II	epcg	SINTAKSA A Voith Company Sintaksa - A Voith Company Ulica Domovinskog rata 104Ç, 21 000 Split, Hrvatska	Unit KA1 control cubicle circuit diagrams SIGNALIZATION	DRAWING No.: PERU-01-19-170-31-001	REV No.: 02	= UACJA10GH100 + UACJA10
Approved by Designer	Grga Kolić	15.6.2026.							
Checked by	Antonio Aleksić	15.6.2026.					Designer No.:	SALES No.:	PAGE 67
Drawn by	Tamara Trogrlić	15.6.2026.	PROJECT NAME	EMPLOYER	DESIGNER				PAGE 67 / 156

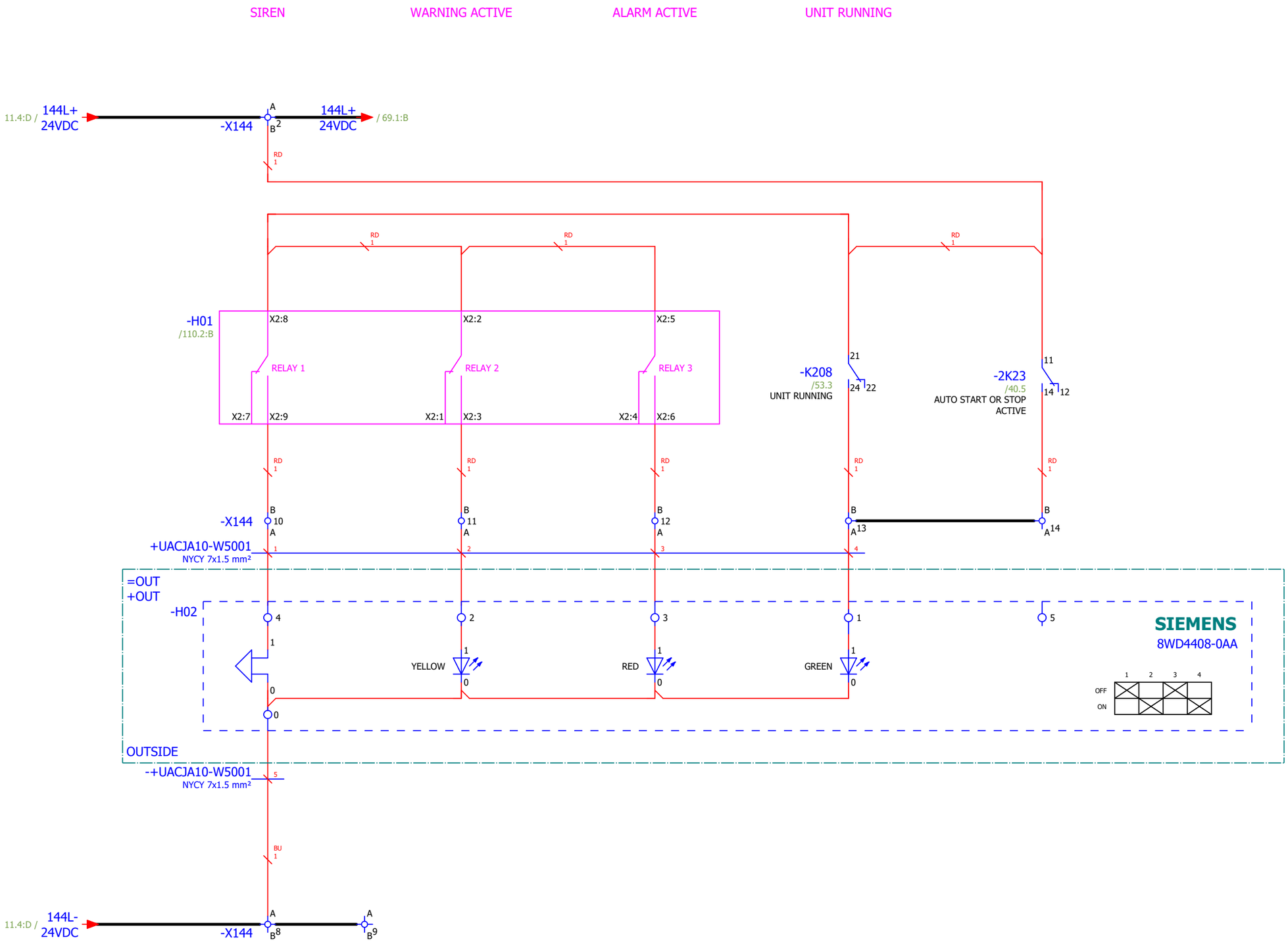

CONFIDENTIAL, ALL RIGHTS RESERVED DIN 34

Format ISO/DIN A3

67

69

Approved by Contractor			Reconstruction and Modernisation of HPP Perucica - Phase II	epcg	SINTAKSA A Voith Company Sintaksa - A Voith Company Ulica Domovinskog rata 104C, 21 000 Split, Hrvatska	Unit KA1 control cubicle circuit diagrams	DRAWING No.:	REV No.:	= UACJA10GH100
Approved by Designer	Grga Kolić	15.6.2026.					PERU-01-19-170-31-001	02	+ UACJA10
Checked by	Antonio Aleksić	15.6.2026.				SIGNAL COLUMN	Designer No.:	SALES No.:	PAGE 68
Drawn by	Tamara Trogrlić	15.6.2026.	PROJECT NAME	EMPLOYER	DESIGNER				PAGE 68 / 156

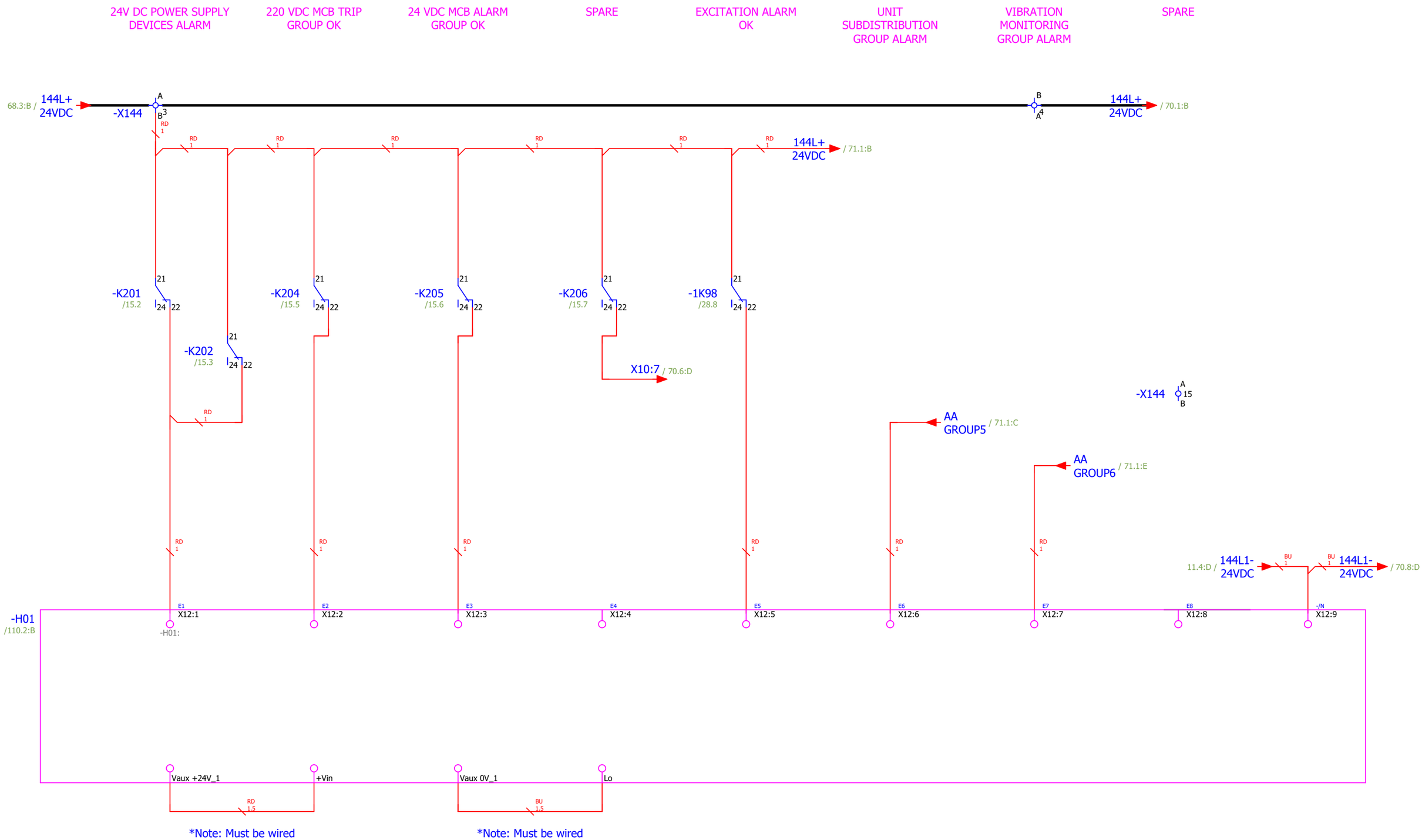

CONFIDENTIAL, ALL RIGHTS RESERVED DIN 34

Format ISO/DIN A3

Approved by Contractor			Reconstruction and Modernisation of HPP Perucica - Phase II	epcg	SINTAKSA A Voith Company Sintaksa - A Voith Company Ulica Domovinskog rata 104Ç, 21 000 Split, Hrvatska	Unit KA1 control cubicle circuit diagrams	DRAWING No.:	REV No.:	= UACJA10GH100
Approved by Designer	Grga Kolić	15.6.2026.					PERU-01-19-170-31-001	02	+ UACJA10
Checked by	Antonio Aleksić	15.6.2026.				ALARM ANNUCIATOR - ALARM	Designer No.:	SALES No.:	PAGE 69
Drawn by	Tamara Trogrlić	15.6.2026.	PROJECT NAME	EMPLOYER	DESIGNER				PAGE 69 / 156

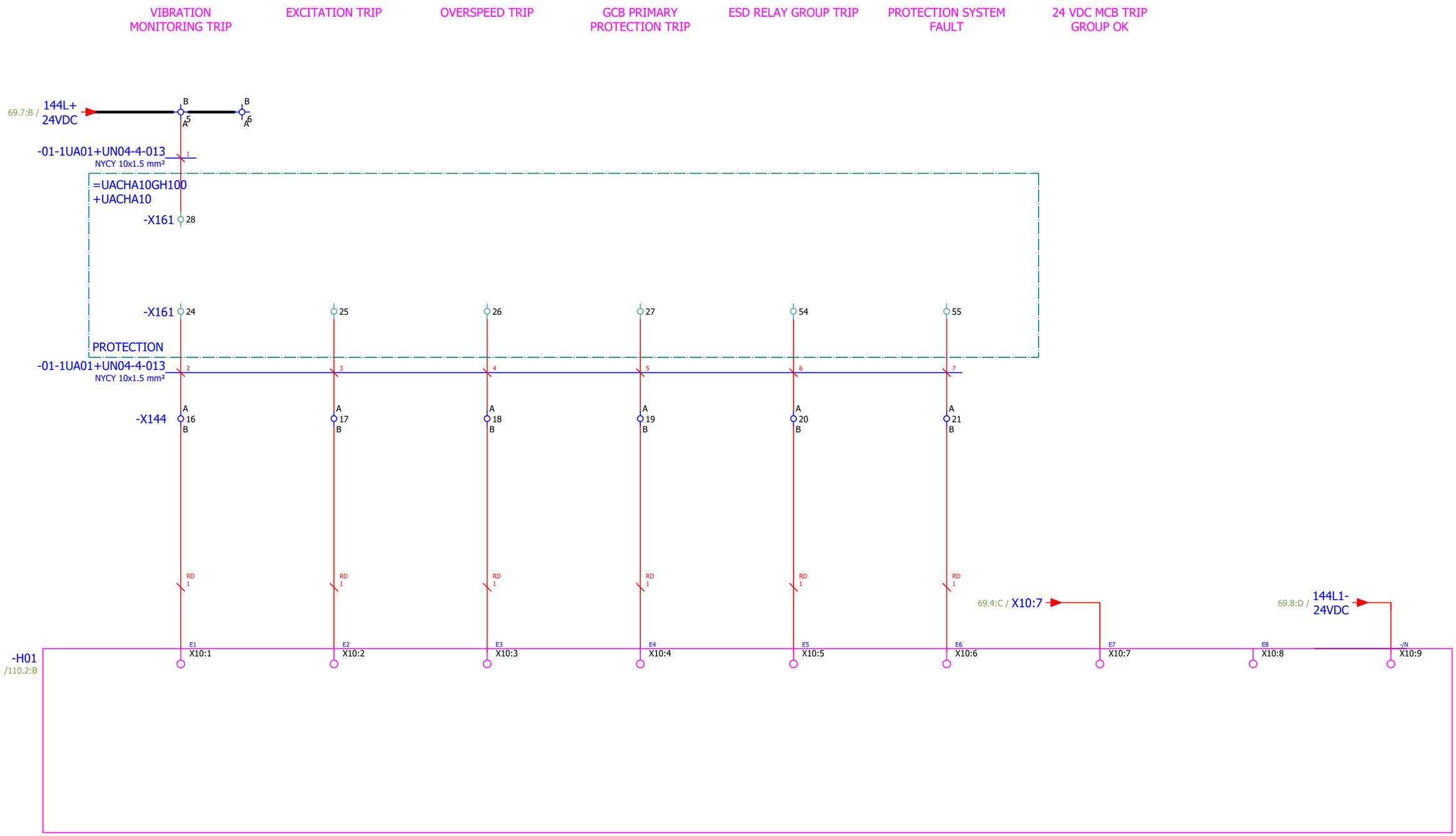

CONFIDENTIAL, ALL RIGHTS RESERVED DIN 34

Format ISO/DIN A3

69

71

Approved by Contractor			Reconstruction and Modernisation of HPP Perucica - Phase II	epcg	SINTAKSA A Voith Company Sintaksa - A Voith Company Ulica Domovinskog rata 104C, 21 000 Split, Hrvatska	Unit KA1 control cubicle circuit diagrams ALARM ANNUCIATOR - TRIP	DRAWING No.: PERU-01-19-170-31-001	REV No.: 02	= UACJA10GH100 + UACJA10
Approved by Designer	Grga Kolić	15.6.2026.					Designer No.:	SALES No.:	PAGE 70
Checked by	Antonio Aleksić	15.6.2026.							PAGE 70 / 156
Drawn by	Tamara Trogrlić	15.6.2026.	PROJECT NAME	EMPLOYER	DESIGNER				

ALARM ANNUNCIATOR
ALARM GROUPS

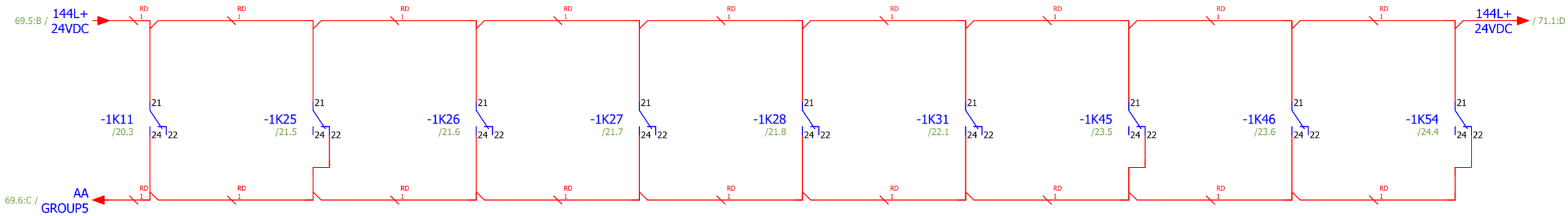

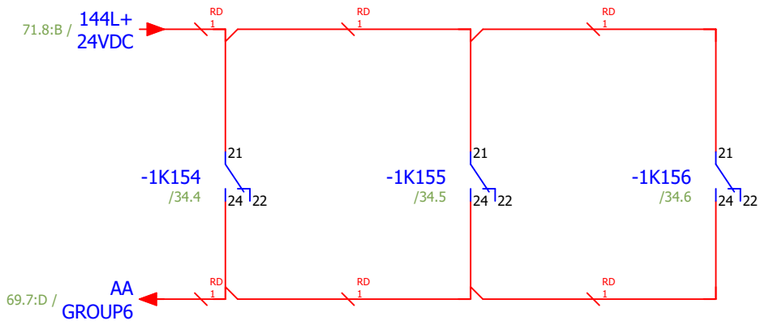

CONFIDENTIAL, ALL RIGHTS RESERVED DIN 34

Format ISO/DIN A3

70

72

Approved by Contractor			Reconstruction and Modernisation of HPP Perucica - Phase II	epcg	SINTAKSA A Voith Company Sintaksa - A Voith Company Ulica Domovinskog rata 104Ç, 21 000 Split, Hrvatska	Unit KA1 control cubicle circuit diagrams ALARM ANNUCIATOR - TRIP	DRAWING No.: PERU-01-19-170-31-001	REV No.: 02	= UACJA10GH100 + UACJA10
Approved by Designer	Grga Kolić	15.6.2026.							
Checked by	Antonio Aleksić	15.6.2026.					Designer No.:	SALES No.:	PAGE 71
Drawn by	Tamara Trogrlić	15.6.2026.	PROJECT NAME	EMPLOYER	DESIGNER				PAGE 71 / 156

CONFIDENTIAL, ALL RIGHTS RESERVED DIN 34

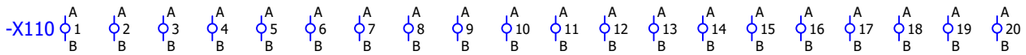

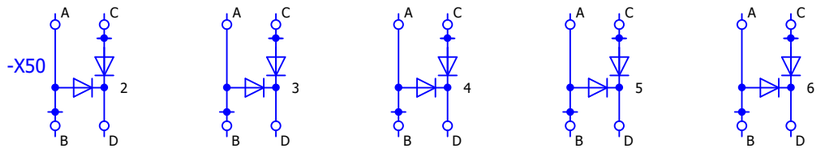

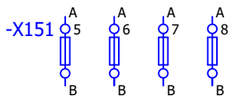

Format ISO/DIN A3

71

73

Approved by Contractor			Reconstruction and Modernisation of HPP Perucica - Phase II	epcg	SINTAKSA A Voith Company Sintaksa - A Voith Company Ulica Domovinskog rata 104Ç, 21 000 Split, Hrvatska	Unit KA1 control cubicle circuit diagrams SPARE CONTACTS	DRAWING No.: PERU-01-19-170-31-001	REV No.: 02	= UACJA10GH100 + UACJA10
Approved by Designer	Grga Kolić	15.6.2026.							
Checked by	Antonio Aleksić	15.6.2026.					Designer No.:	SALES No.:	PAGE 72
Drawn by	Tamara Trogrlić	15.6.2026.	PROJECT NAME	EMPLOYER	DESIGNER				PAGE 72 / 156

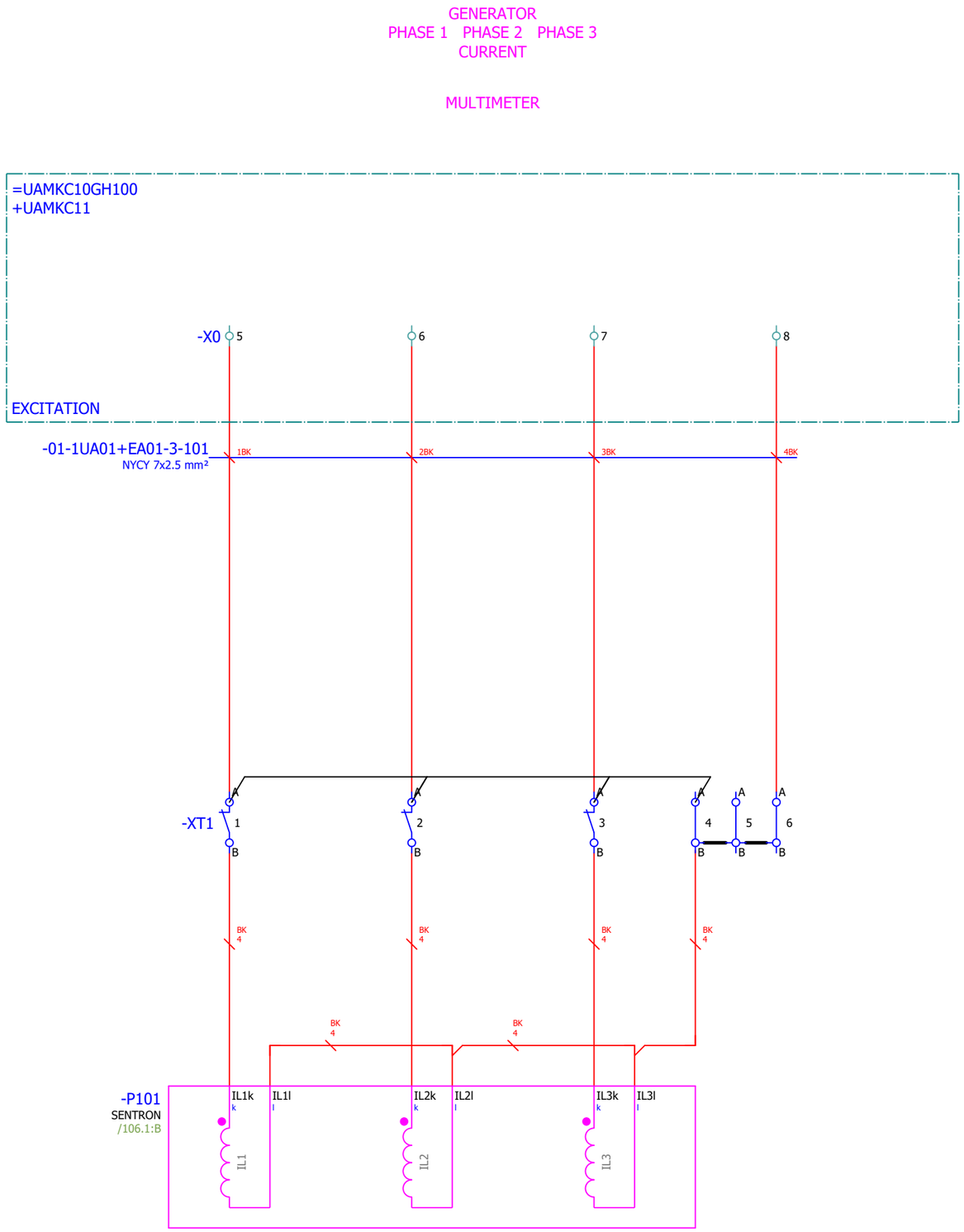

CONFIDENTIAL, ALL RIGHTS RESERVED DIN 34

Format ISO/DIN A3

72

74

Approved by Contractor			Reconstruction and Modernisation of HPP Perucica - Phase II	epcg	SINTAKSA A Voith Company Sintaksa - A Voith Company Ulica Domovinskog rata 104Ç, 21 000 Split, Hrvatska	Unit KA1 control cubicle circuit diagrams	DRAWING No.:	REV No.:	= UACJA10GH100
Approved by Designer	Grga Kolić	15.6.2026.					PERU-01-19-170-31-001	02	+ UACJA10
Checked by	Antonio Aleksić	15.6.2026.				CT CIRCUITS	Designer No.:	SALES No.:	PAGE 73
Drawn by	Tamara Trogrlić	15.6.2026.	PROJECT NAME	EMPLOYER	DESIGNER				PAGE 73 / 156

CONFIDENTIAL, ALL RIGHTS RESERVED DIN 34

Format ISO/DIN A3

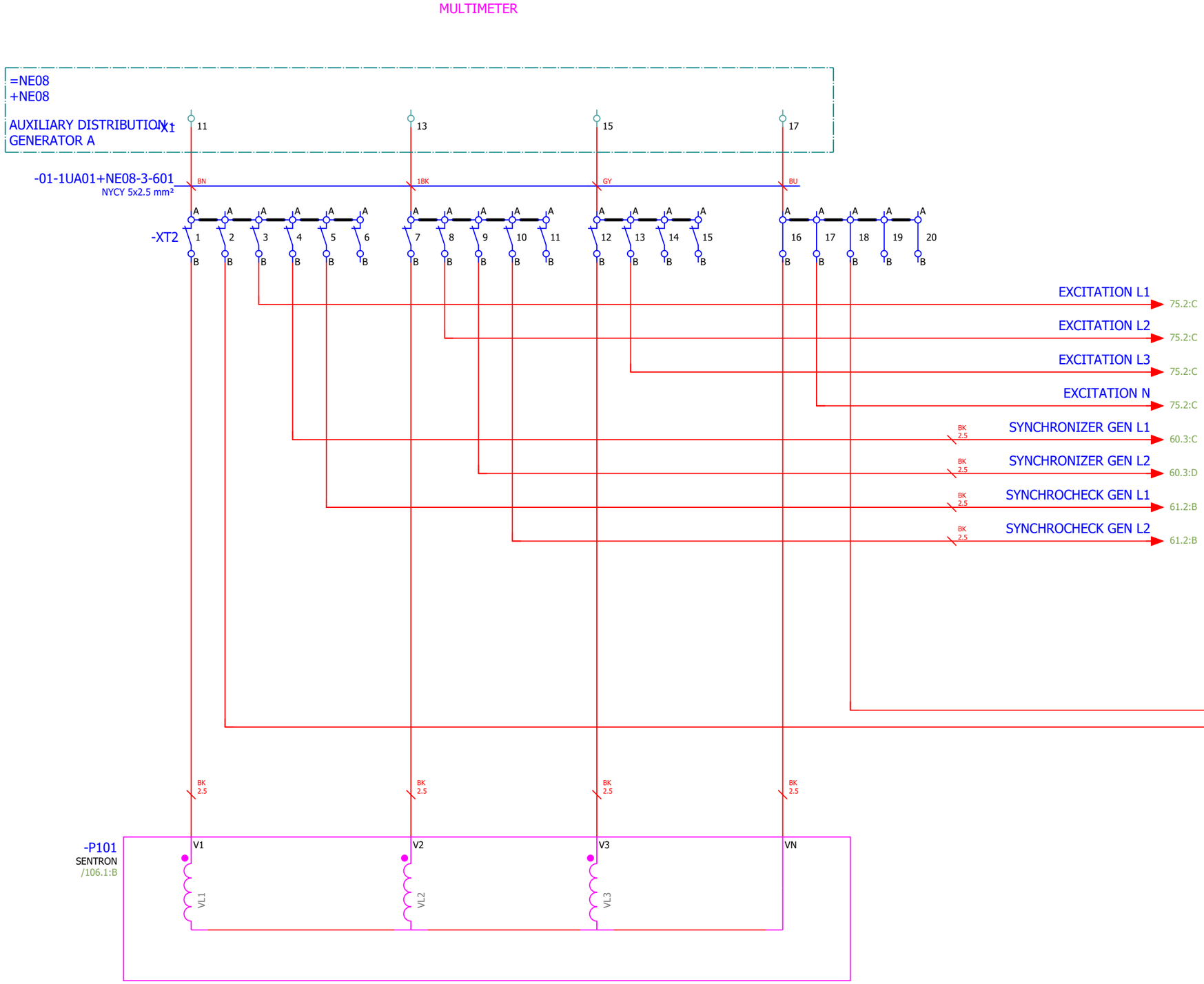

Approved by Contractor			Reconstruction and Modernisation of HPP Perucica - Phase II	epcg	SINTAKSA A Voith Company Sintaksa - A Voith Company Ulica Domovinskog rata 104C, 21 000 Split, Hrvatska	Unit KA1 control cubicle circuit diagrams	DRAWING No.:	REV No.:	= UACJA10GH100
Approved by Designer	Grga Kolić	15.6.2026.					PERU-01-19-170-31-001	02	+ UACJA10
Checked by	Antonio Aleksić	15.6.2026.				VT CIRCUITS	Designer No.:	SALES No.:	PAGE 74
Drawn by	Tamara Trogrlić	15.6.2026.	PROJECT NAME	EMPLOYER	DESIGNER				PAGE 74 / 156

CONFIDENTIAL, ALL RIGHTS RESERVED DIN 34

Format ISO/DIN A3

EXCITATION VOLTAGE

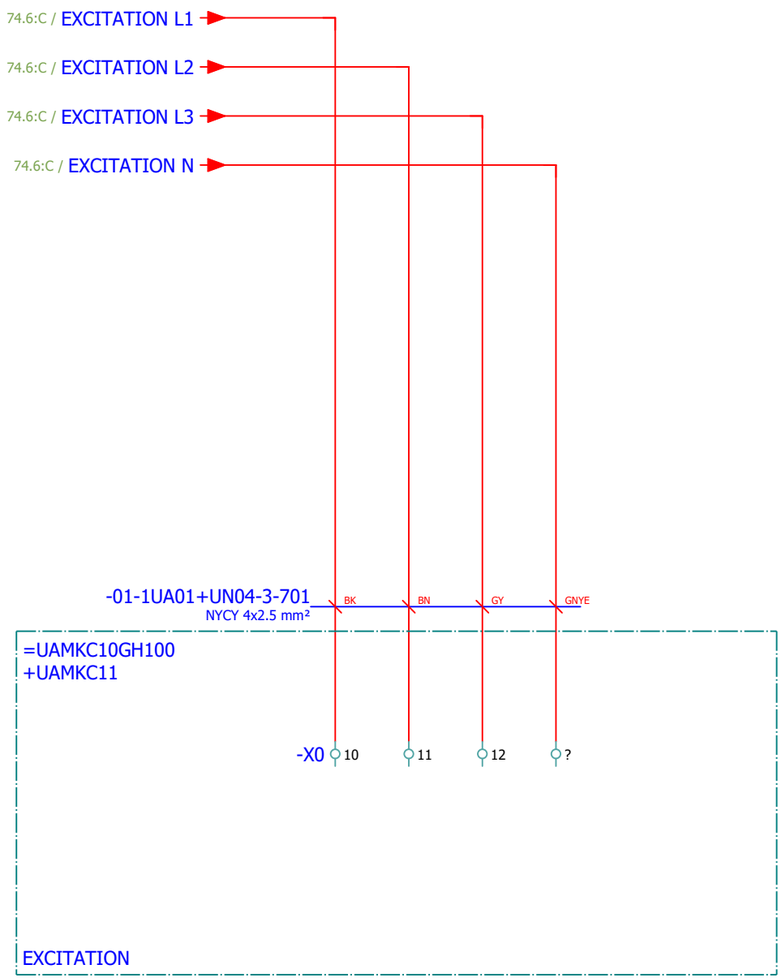

Approved by Contractor			Reconstruction and Modernisation of HPP Perucica - Phase II	epcg	SINTAKSA A Voith Company Sintaksa - A Voith Company Ulica Domovinskog rata 104C, 21 000 Split, Hrvatska	Unit KA1 control cubicle circuit diagrams	DRAWING No.:	REV No.:	= UACJA10GH100
Approved by Designer	Grga Kolić	15.6.2026.					PERU-01-19-170-31-001	02	+ UACJA10
Checked by	Antonio Aleksić	15.6.2026.				VT CIRCUITS	Designer No.:	SALES No.:	PAGE 75
Drawn by	Tamara Trogrlić	15.6.2026.	PROJECT NAME	EMPLOYER	DESIGNER				PAGE 75 / 156

CONFIDENTIAL, ALL RIGHTS RESERVED DIN 34

Format ISO/DIN A3

0,4 kV BUSBAR VOLTAGE

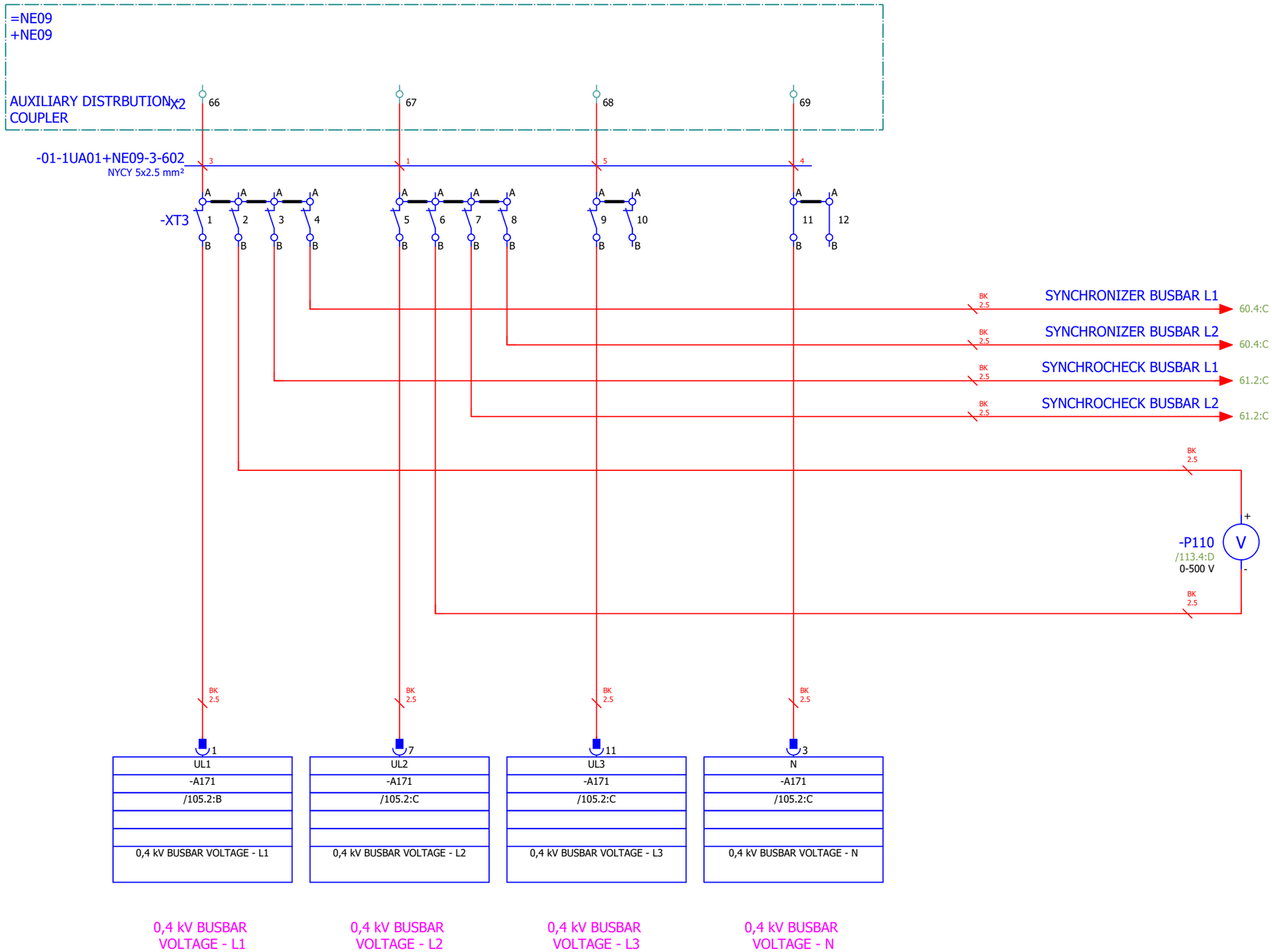

Approved by Contractor			Reconstruction and Modernisation of HPP Perucica - Phase II	epcg	SINTAKSA A Voith Company	Unit KA1 control cubicle circuit diagrams	DRAWING No.:	REV No.:	= UACJA10GH100
Approved by Designer	Grga Kolić	15.6.2026.			Sintaksa - A Voith Company, Ulica Domovinskog rata 104C, 21 000 Split, Hrvatska		PERU-01-19-170-31-001	02	+ UACJA10
Checked by	Antonio Aleksić	15.6.2026.				VT CIRCUITS	Designer No.:	SALES No.:	PAGE 76
Drawn by	Tamara Trogrlić	15.6.2026.	PROJECT NAME	EMPLOYER	DESIGNER				PAGE 76 / 156

TRANSFORMER VOLTAGE

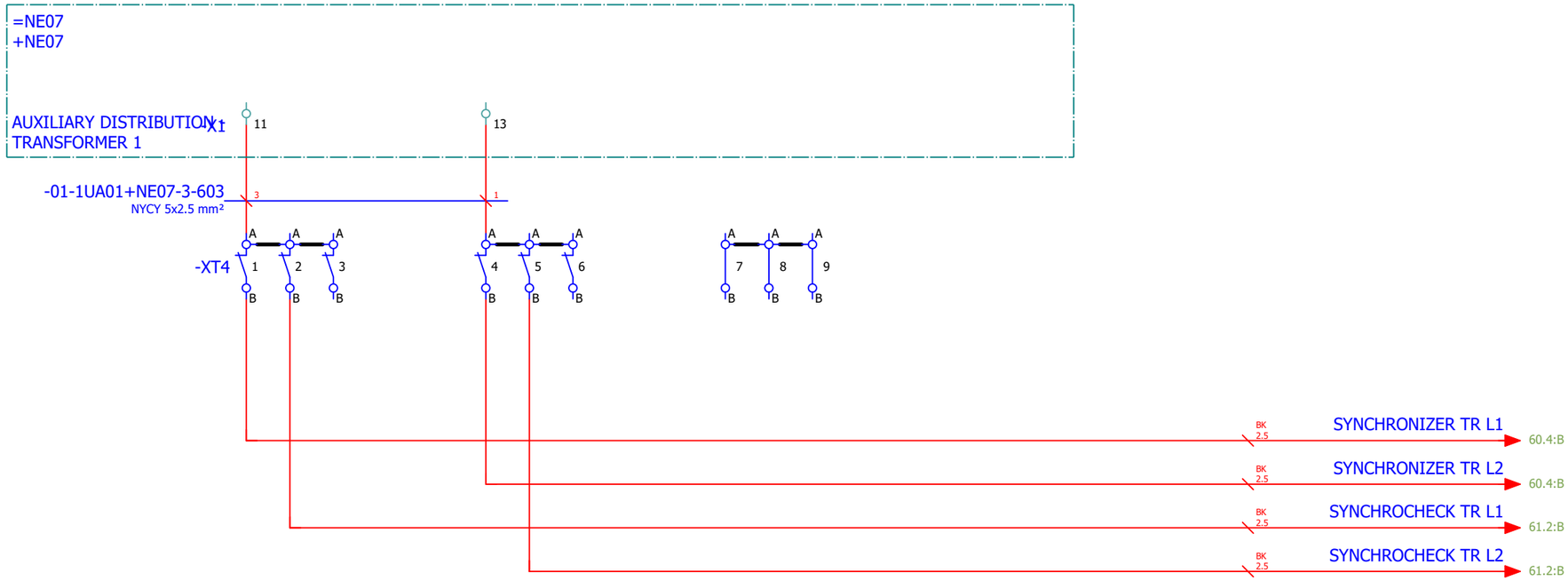

CONFIDENTIAL, ALL RIGHTS RESERVED DIN 34

Format ISO/DIN A3

76

78

Approved by Contractor			Reconstruction and Modernisation of HPP Perucica - Phase II	epcg	SINTAKSA A Voith Company Sintaksa - A Voith Company Ulica Domovinskog rata 104C, 21 000 Split, Hrvatska	Unit KA1 control cubicle circuit diagrams	DRAWING No.: PERU-01-19-170-31-001	REV No.: 02	= UACJA10GH100
Approved by Designer	Grga Kolić	15.6.2026.							+ UACJA10
Checked by	Antonio Aleksić	15.6.2026.				VT CIRCUITS	Designer No.:	SALES No.:	PAGE 77
Drawn by	Tamara Trogrlić	15.6.2026.	PROJECT NAME	EMPLOYER	DESIGNER				PAGE 77 / 156

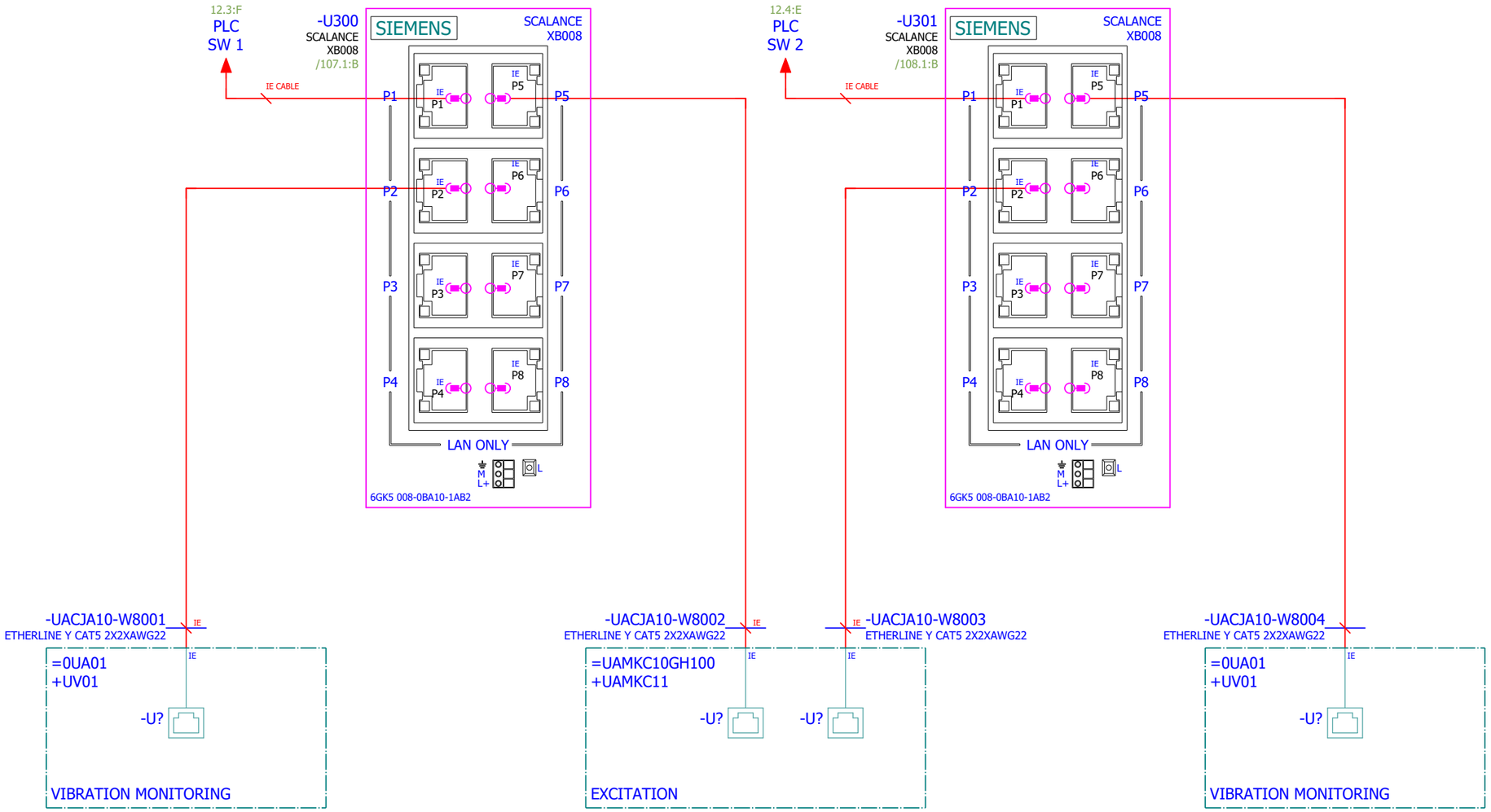

CONFIDENTIAL, ALL RIGHTS RESERVED DIN 34

Format ISO/DIN A3

77

79

Approved by Contractor			Reconstruction and Modernisation of HPP Perucica - Phase II	epcg	SINTAKSA A Voith Company Sintaksa - A Voith Company Ulica Domovinskog rata 104C, 21 000 Split, Hrvatska	Unit KA1 control cubicle circuit diagrams SWITCH	DRAWING No.: PERU-01-19-170-31-001	REV No.: 02	= UACJA10GH100 + UACJA10
Approved by Designer	Grga Kolić	15.6.2026.					Designer No.:	SALES No.:	PAGE 78
Checked by	Antonio Aleksić	15.6.2026.							PAGE 78 / 156
Drawn by	Tamara Trogrlić	15.6.2026.	PROJECT NAME	EMPLOYER	DESIGNER				

CONFIDENTIAL, ALL RIGHTS RESERVED DIN 34

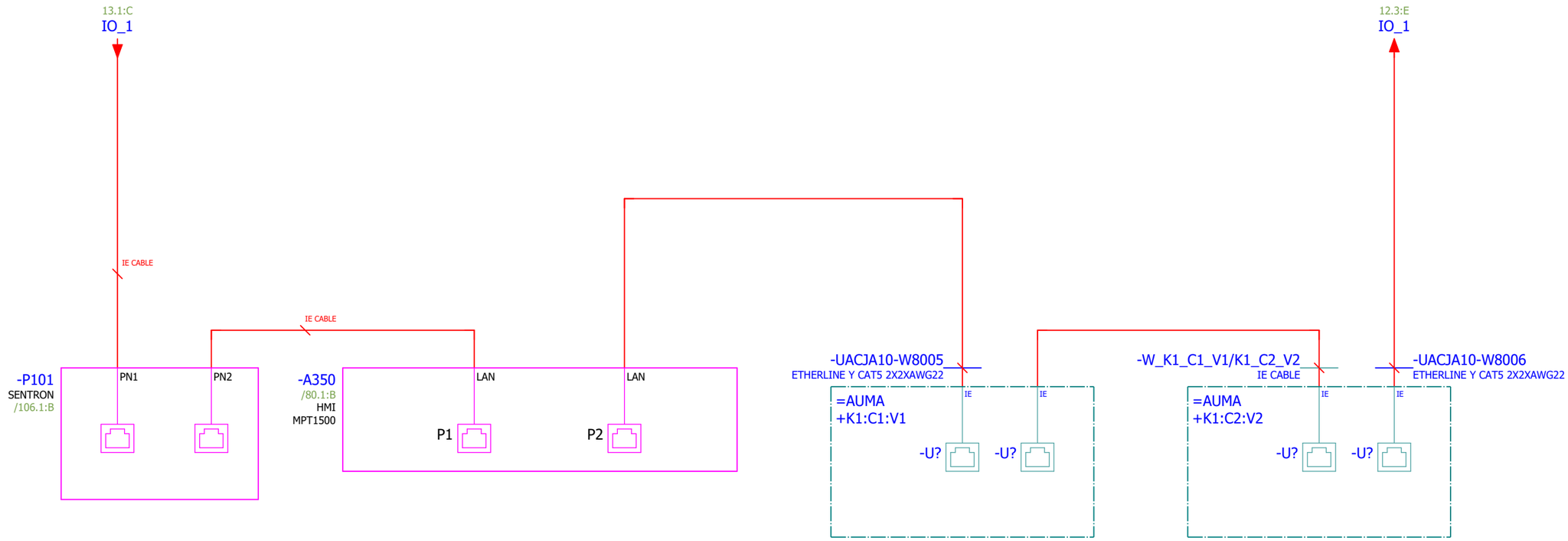

Format ISO/DIN A3

78

80

Approved by Contractor			Reconstruction and Modernisation of HPP Perucica - Phase II	epcg	SINTAKSA A Voith Company Sintaksa - A Voith Company Ulica Domovinskog rata 104Ç, 21 000 Split, Hrvatska	Unit KA1 control cubicle circuit diagrams	DRAWING No.:	REV No.:	= UACJA10GH100
Approved by Designer	Grga Kolić	15.6.2026.					PERU-01-19-170-31-001	02	+ UACJA10
Checked by	Antonio Aleksić	15.6.2026.				COMMUNICATION	Designer No.:	SALES No.:	PAGE 79
Drawn by	Tamara Trogrlić	15.6.2026.	PROJECT NAME	EMPLOYER	DESIGNER				PAGE 79 / 156

Qty. (pcs)	Equipment technical description	Manufacturer	Location (= / +)	Designation (-)	Symbol Position in shematics (Page, column)
1	SIMATIC HMI MTP1500 Unified Comfort SIMATIC HMI MTP1500, Unified Comfort Panel, touch operation, 15.6" widescreen TFT display, 16 million colors, PROFINET interface, configurable as of WinCC Unified Comfort V16, contains open-source software, which is provided free of charge see enclosed DVD 6AV2128-3QB06-0AX1 Memory card 6AV2181-8XP00-0AX0	Siemens	+UACJA10	-A350	

CONFIDENTIAL, ALL RIGHTS RESERVED DIN 34

Format ISO/DIN A3

Approved by Contractor			Reconstruction and Modernisation of HPP Perucica - Phase II	epcg	SINTAKSA A Voith Company Sintaksa - A Voith Company Ulica Domovinskog rata 104Ç, 21 000 Split, Hrvatska	Unit KA1 control cubicle circuit diagrams	DRAWING No.:	REV No.:	= UACJA10GH100
Approved by Designer	Grga Kolić	15.6.2026.					PERU-01-19-170-31-001	02	+ UACJA10
Checked by	Antonio Aleksić	15.6.2026.				HMI - TOUCH PANEL	Designer No.:	SALES No.:	PAGE 80
Drawn by	Tamara Trogrlić	15.6.2026.	PROJECT NAME	EMPLOYER	DESIGNER				PAGE 80 / 156

Qty. (pcs)	Equipment technical description	Manufacturer	Location (= / +)	Designation (-)	Symbol Position in shematics (Page, column)
1	6ES7505-0KA00-0AB0 Power supply module 25W 24 V DC Simatic S7-1500 Supplies the backplane bus of the S7-1500 with operating voltage	Siemens	+UACJA10	-A101	

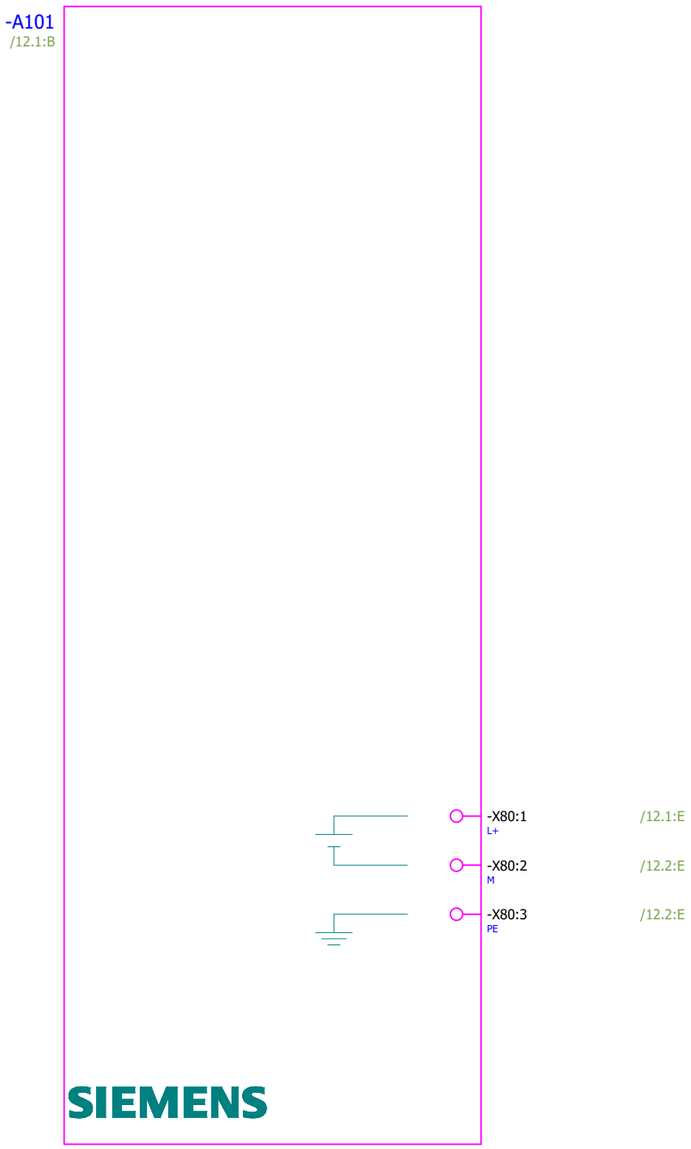

CONFIDENTIAL, ALL RIGHTS RESERVED DIN 34

Format ISO/DIN A3

Approved by Contractor			Reconstruction and Modernisation of HPP Perucica - Phase II	epcg	SINTAKSA A Voith Company Sintaksa - A Voith Company Ulica Domovinskog rata 104Ç, 21 000 Split, Hrvatska	Unit KA1 control cubicle circuit diagrams	DRAWING No.:	REV No.:	= UACJA10GH100
Approved by Designer	Grga Kolić	15.6.2026.					PERU-01-19-170-31-001	02	+ UACJA10
Checked by	Antonio Aleksić	15.6.2026.				PLC OVERVIEW	Designer No.:	SALES No.:	PAGE 81
Drawn by	Tamara Trogrlić	15.6.2026.	PROJECT NAME	EMPLOYER	DESIGNER				PAGE 81 / 156

Qty. (pcs)	Equipment technical description	Manufacturer	Location (= / +)	Designation (-)	Symbol Position in shematics (Page, column)
1	CPU 1515-2 PN SIMATIC S7-1500 Work memory 1 MB and 4.5 MB for data 1st interface: PROFINET IRT with 2-port switch, 2nd interface: PROFINET RT, 6 ns bit performance SIMATIC Memory Card required 6ES7515-2AN03-0AB0 SIMATIC S7 Memory card 24 MB For S7-1x00 CPU 6ES7954-8LF04-0AA0	Siemens	+UACJA10	-A102	

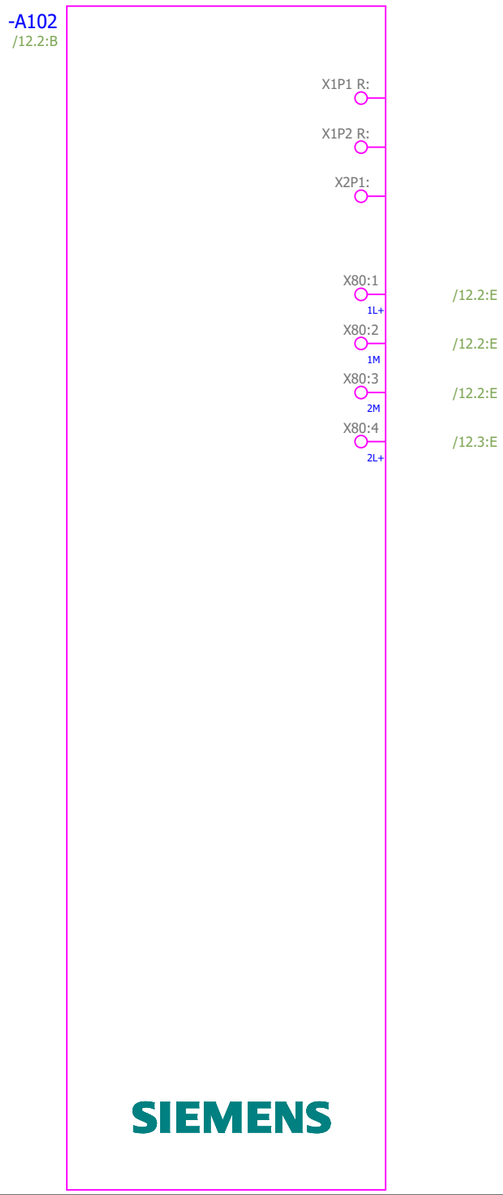

CONFIDENTIAL, ALL RIGHTS RESERVED DIN 34

Format ISO/DIN A3

Approved by Contractor			Reconstruction and Modernisation of HPP Perucica - Phase II	epcg	SINTAKSA A Voith Company Sintaksa - A Voith Company Ulica Domovinskog rata 104Ç, 21 000 Split, Hrvatska	Unit KA1 control cubicle circuit diagrams	DRAWING No.:	REV No.:	= UACJA10GH100
Approved by Designer	Grga Kolić	15.6.2026.					PERU-01-19-170-31-001	02	+ UACJA10
Checked by	Antonio Aleksić	15.6.2026.				PLC OVERVIEW CPU	Designer No.:	SALES No.:	PAGE 82
Drawn by	Tamara Trogrlić	15.6.2026.	PROJECT NAME	EMPLOYER	DESIGNER				PAGE 82 / 156

Qty. (pcs)	Equipment technical description	Manufacturer	Location (= / +)	Designation (-)	Symbol Position in shematics (Page, column)
1	CM 1542-1 Communications module CM 1542-1 for connection of S7-1500 to PROFINET as IO Controller or IO Device: TCP/IP, ISO-on-TCP, UDP, S7 communication, IP broadcast multicast, SNMPV1, time-of-day synchronization via NTP, 2xRJ45 (10/100 Mbit). 6GK7542-1AX10-0XE0	Siemens	+UACJA10	-A103	

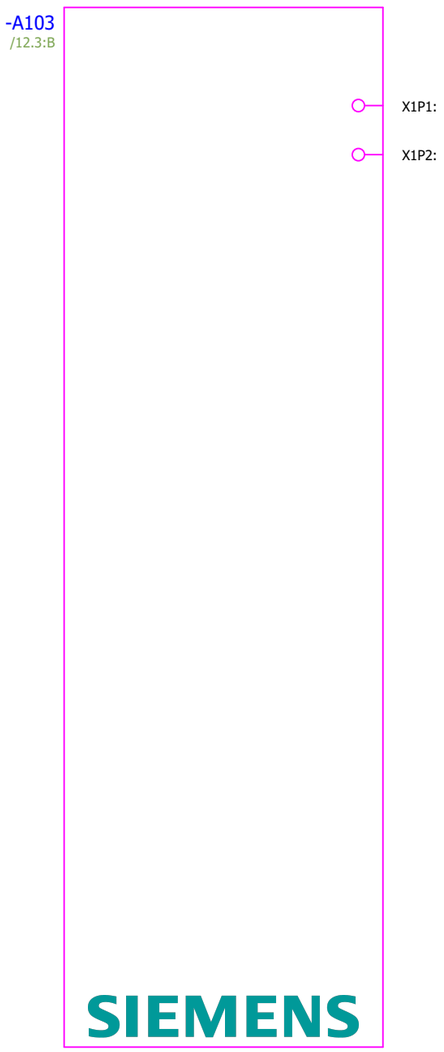

CONFIDENTIAL, ALL RIGHTS RESERVED DIN 34

Format ISO/DIN A3

Approved by Contractor			Reconstruction and Modernisation of HPP Perucica - Phase II	epcg	SINTAKSA A Voith Company Sintaksa - A Voith Company Ulica Domovinskog rata 104Ç, 21 000 Split, Hrvatska	Unit KA1 control cubicle circuit diagrams PLC OVERVIEW	DRAWING No.: PERU-01-19-170-31-001	REV No.: 02	= UACJA10GH100 + UACJA10
Approved by Designer	Grga Kolić	15.6.2026.							
Checked by	Antonio Aleksić	15.6.2026.					Designer No.:	SALES No.:	PAGE 83
Drawn by	Tamara Trogrlić	15.6.2026.	PROJECT NAME	EMPLOYER	DESIGNER				PAGE 83 / 156

Qty. (pcs)	Equipment technical description	Manufacturer	Location (= / +)	Designation (-)	Symbol Position in shematics (Page, column)
1	Interface module ET200SP PROFINET, 2-port interface module IM 155-6PN/2 SIMATIC ET 200SP 1 BusAdapter slot; max. 64 I/O modules; 16 ET 200AL modules 6ES7155-6AU01-0CN0 PLC Bus adapter 6ES7193-6AR00-0AA0	Siemens	+UACJA10	-A100	

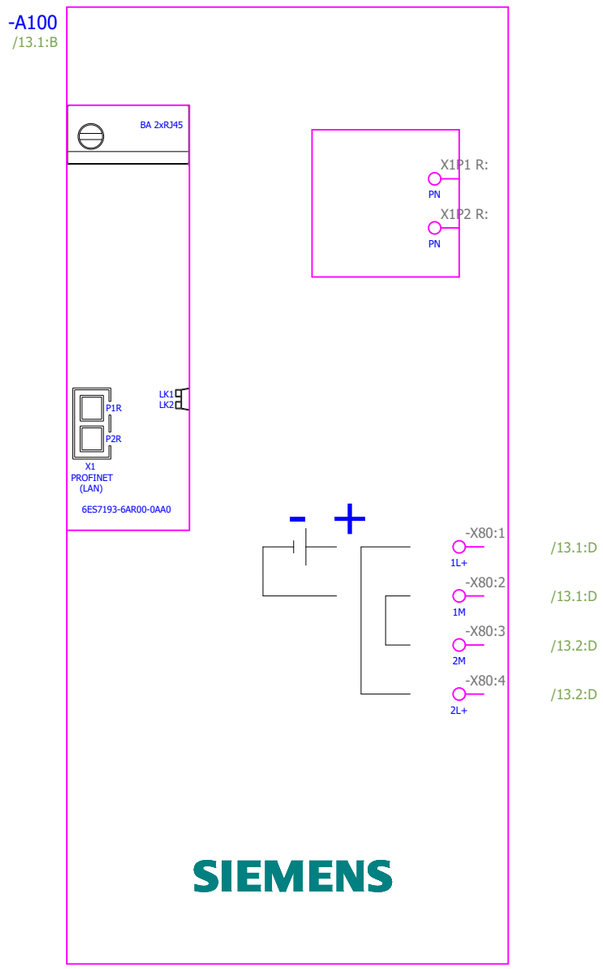

CONFIDENTIAL, ALL RIGHTS RESERVED DIN 34

Format ISO/DIN A3

83

85

Approved by Contractor			Reconstruction and Modernisation of HPP Perucica - Phase II	epcg	SINTAKSA A Voith Company Sintaksa - A Voith Company Ulica Domovinskog rata 104C, 21 000 Split, Hrvatska	Unit KA1 control cubicle circuit diagrams	DRAWING No.: PERU-01-19-170-31-001	REV No.: 02	= UACJA10GH100
Approved by Designer	Grga Kolić	15.6.2026.							+ UACJA10
Checked by	Antonio Aleksić	15.6.2026.				PLC OVERVIEW COMM.	Designer No.:	SALES No.:	PAGE 84
Drawn by	Tamara Trogrlić	15.6.2026.	PROJECT NAME	EMPLOYER	DESIGNER				PAGE 84 / 156

Qty. (pcs)	Equipment technical description	Manufacturer	Location (= / +)	Designation (-)	Symbol Position in shematics (Page, column)
1	Counter module for ET200SP 1 channel for 24V incremental encoder or pulse encoder Type: TM count 1x 24 V Counter module Order No.: 6ES7138-6AA01-0BA0 6ES7138-6AA01-0BA0 BaseUnit BU15-P16+A0+2D 6ES7193-6BP00-0DA0	Siemens	+UACJA10	-A104	

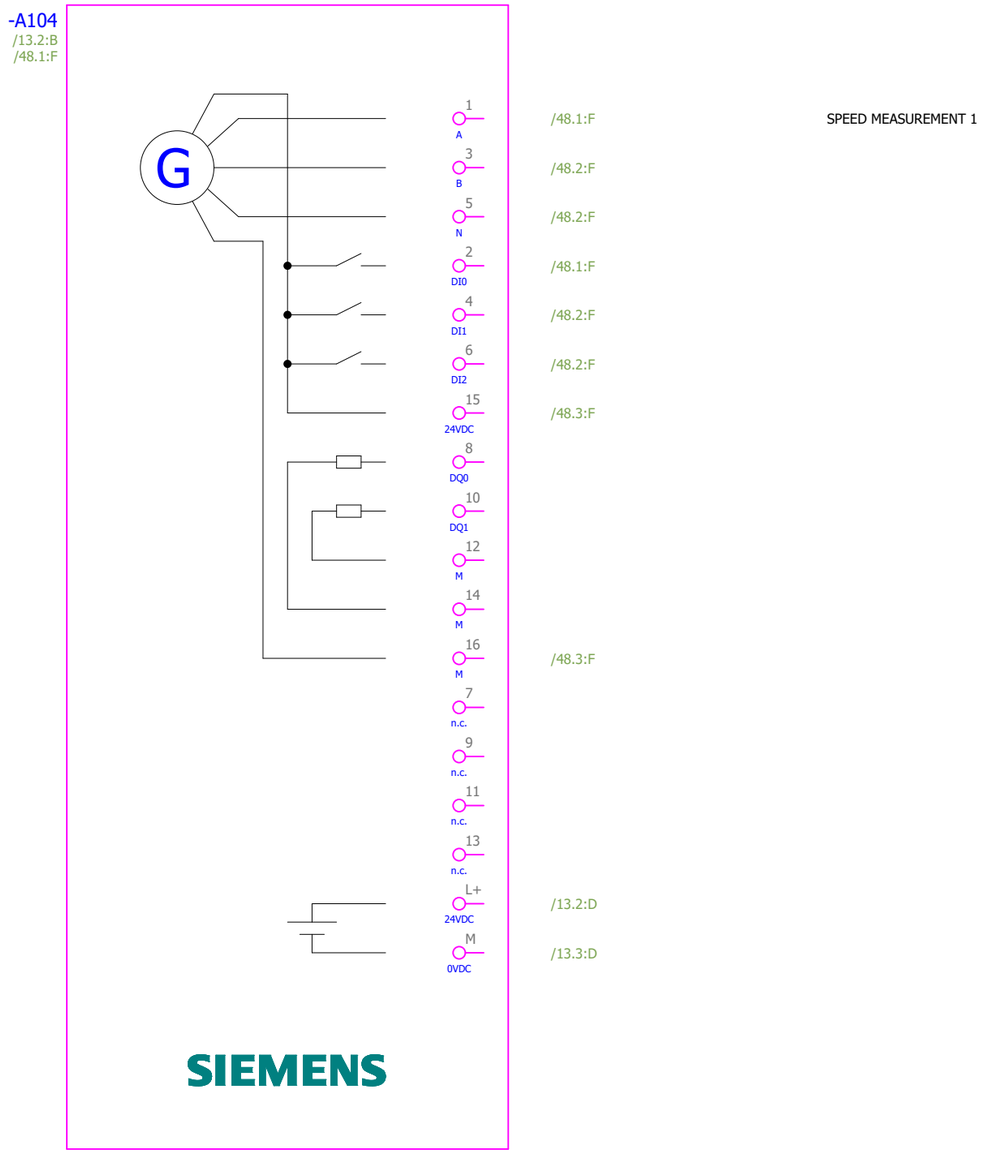

SPEED MEASUREMENT 1

CONFIDENTIAL, ALL RIGHTS RESERVED DIN 34

Format ISO/DIN A3

Approved by Contractor			Reconstruction and Modernisation of HPP Perucica - Phase II	epcg	SINTAKSA A Voith Company Sintaksa - A Voith Company Ulica Domovinskog rata 104C, 21 000 Split, Hrvatska	Unit KA1 control cubicle circuit diagrams	DRAWING No.: PERU-01-19-170-31-001	REV No.: 02	= UACJA10GH100
Approved by Designer	Grga Kolić	15.6.2026.							+ UACJA10
Checked by	Antonio Aleksić	15.6.2026.				PLC OVERVIEW TM COUNT.	Designer No.:	SALES No.:	PAGE 85
Drawn by	Tamara Trogrlić	15.6.2026.	PROJECT NAME	EMPLOYER	DESIGNER				PAGE 85 / 156

Qty. (pcs)	Equipment technical description	Manufacturer	Location (= / +)	Designation (-)	Symbol Position in shematics (Page, column)
1	Counter module for ET200SP 1 channel for 24V incremental encoder or pulse encoder Type: TM count 1x 24 V Counter module Order No.: 6ES7138-6AA01-0BA0 6ES7138-6AA01-0BA0 BaseUnit BU15-P16+A0+2B 6ES7193-6BP00-0BA0	Siemens	+UACJA10	-A105	

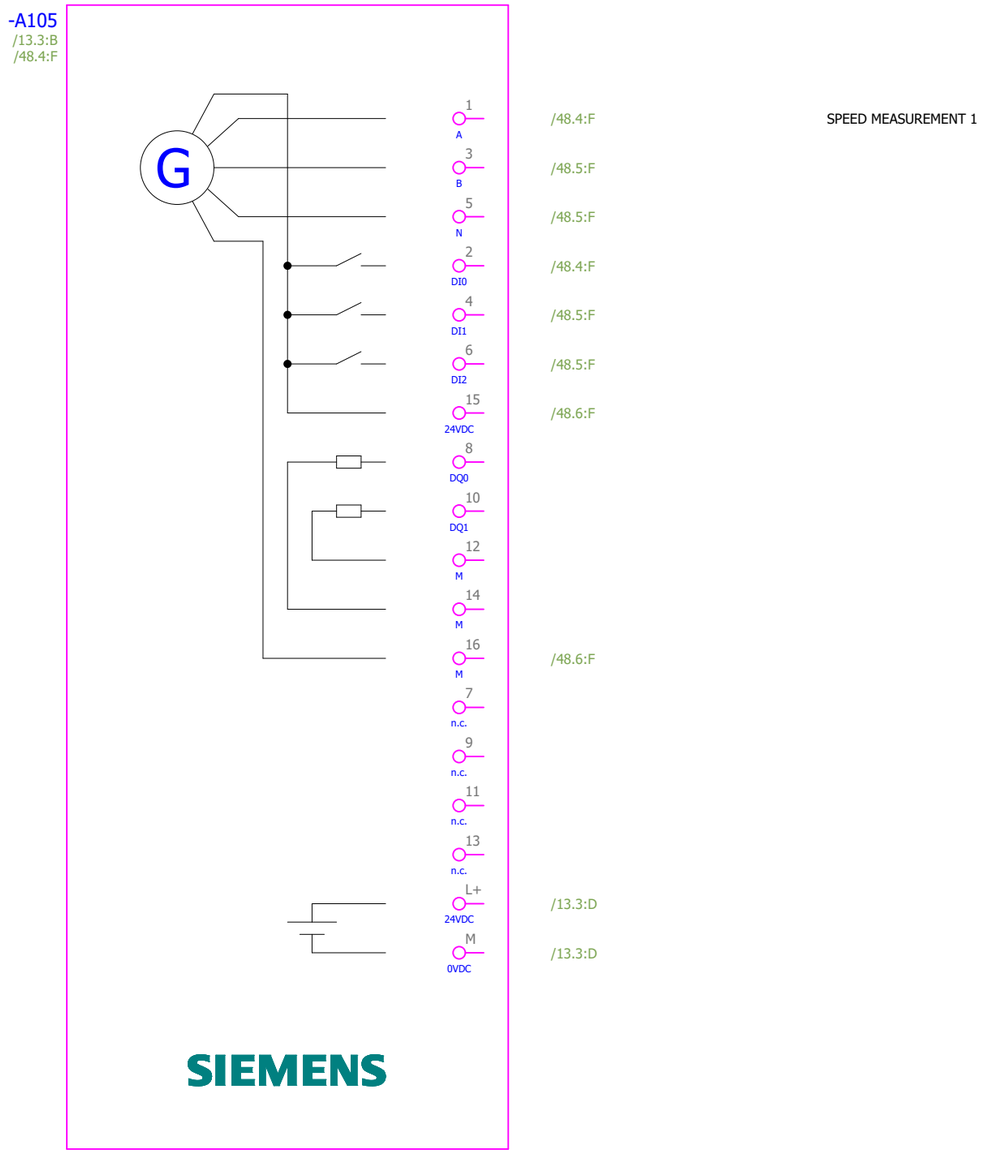

SPEED MEASUREMENT 1

CONFIDENTIAL, ALL RIGHTS RESERVED DIN 34

Format ISO/DIN A3

Approved by Contractor			Reconstruction and Modernisation of HPP Perucica - Phase II	epcg	SINTAKSA A Voith Company Sintaksa - A Voith Company Ulica Domovinskog rata 104C, 21 000 Split, Hrvatska	Unit KA1 control cubicle circuit diagrams	DRAWING No.: PERU-01-19-170-31-001	REV No.: 02	= UACJA10GH100
Approved by Designer	Grga Kolić	15.6.2026.							+ UACJA10
Checked by	Antonio Aleksić	15.6.2026.				PLC OVERVIEW TM COUNT.	Designer No.:	SALES No.:	PAGE 86
Drawn by	Tamara Trogrlić	15.6.2026.	PROJECT NAME	EMPLOYER	DESIGNER				PAGE 86 / 156

Qty. (pcs)	Equipment technical description	Manufacturer	Location (= / +)	Designation (-)	Symbol Position in shematics (Page, column)
1	Digital input module ET 200SP DI 16X24V DC Standard type 3 (IEC 61131); sink input; fits to BU-type A0 input delay time 0,05..20ms; Diagnostics: wire break, supply voltage 6ES7131-6BH01-0BA0 BaseUnit BU15-P16+A0+2B 6ES7193-6BP00-0BA0	Siemens	+UACJA10	-A111	

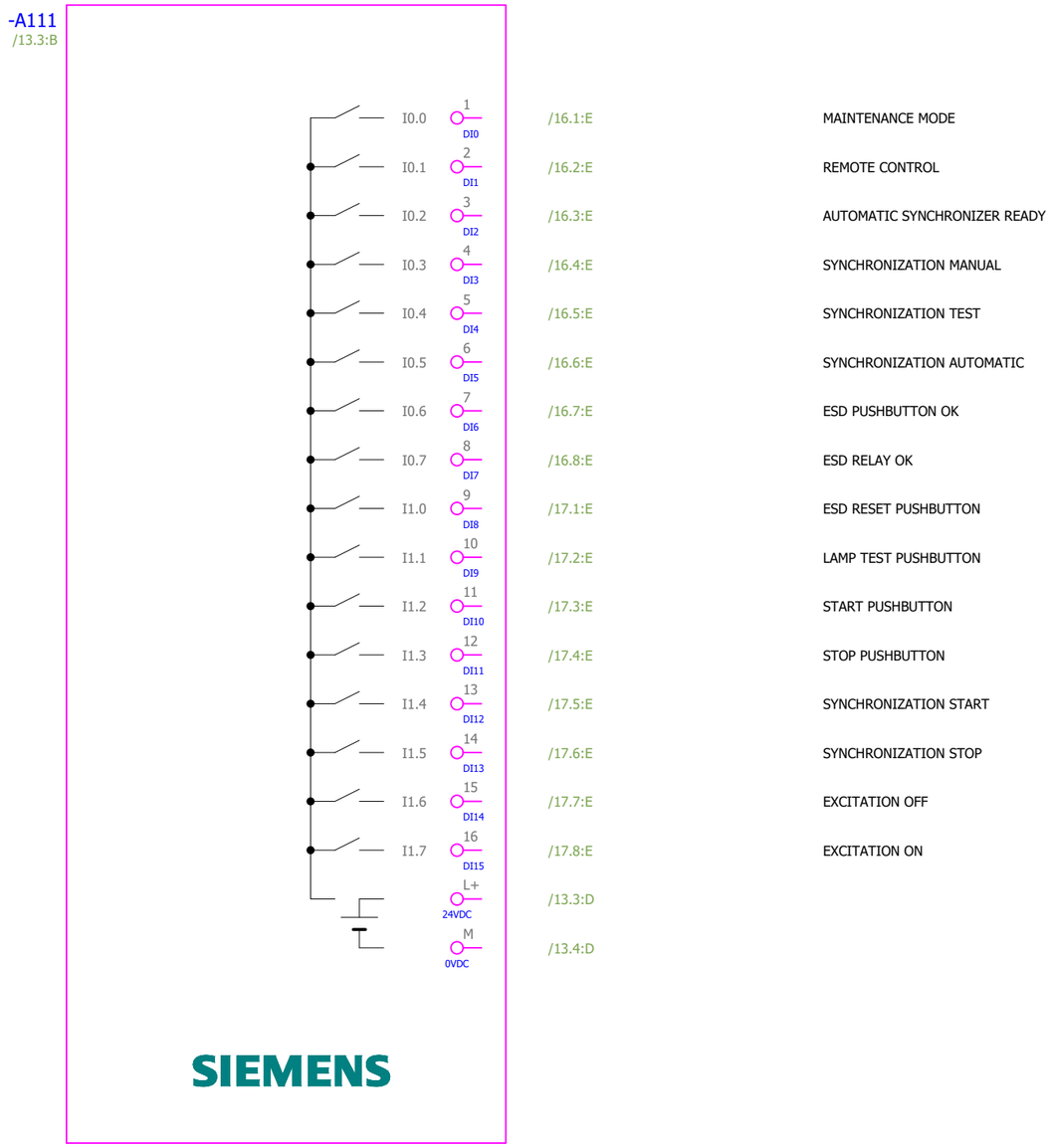

CONFIDENTIAL, ALL RIGHTS RESERVED DIN 34

Format ISO/DIN A3

Approved by Contractor			Reconstruction and Modernisation of HPP Perucica - Phase II	epcg	SINTAKSA A Voith Company Sintaksa - A Voith Company Ulica Domovinskog rata 104C, 21 000 Split, Hrvatska	Unit KA1 control cubicle circuit diagrams	DRAWING No.: PERU-01-19-170-31-001	REV No.: 02	= UACJA10GH100
Approved by Designer	Grga Kolić	15.6.2026.							+ UACJA10
Checked by	Antonio Aleksić	15.6.2026.				PLC OVERVIEW DI	Designer No.:	SALES No.:	PAGE 87
Drawn by	Tamara Trogrlić	15.6.2026.	PROJECT NAME	EMPLOYER	DESIGNER				PAGE 87 / 156

Qty. (pcs)	Equipment technical description	Manufacturer	Location (= / +)	Designation (-)	Symbol Position in shematics (Page, column)
1	Digital input module ET 200SP DI 16X24V DC Standard type 3 (IEC 61131); sink input; fits to BU-type A0 input delay time 0,05..20ms; Diagnostics: wire break, supply voltage 6ES7131-6BH01-0BA0 BaseUnit BU15-P16+A0+2B 6ES7193-6BP00-0BA0	Siemens	+UACJA10	-A112	

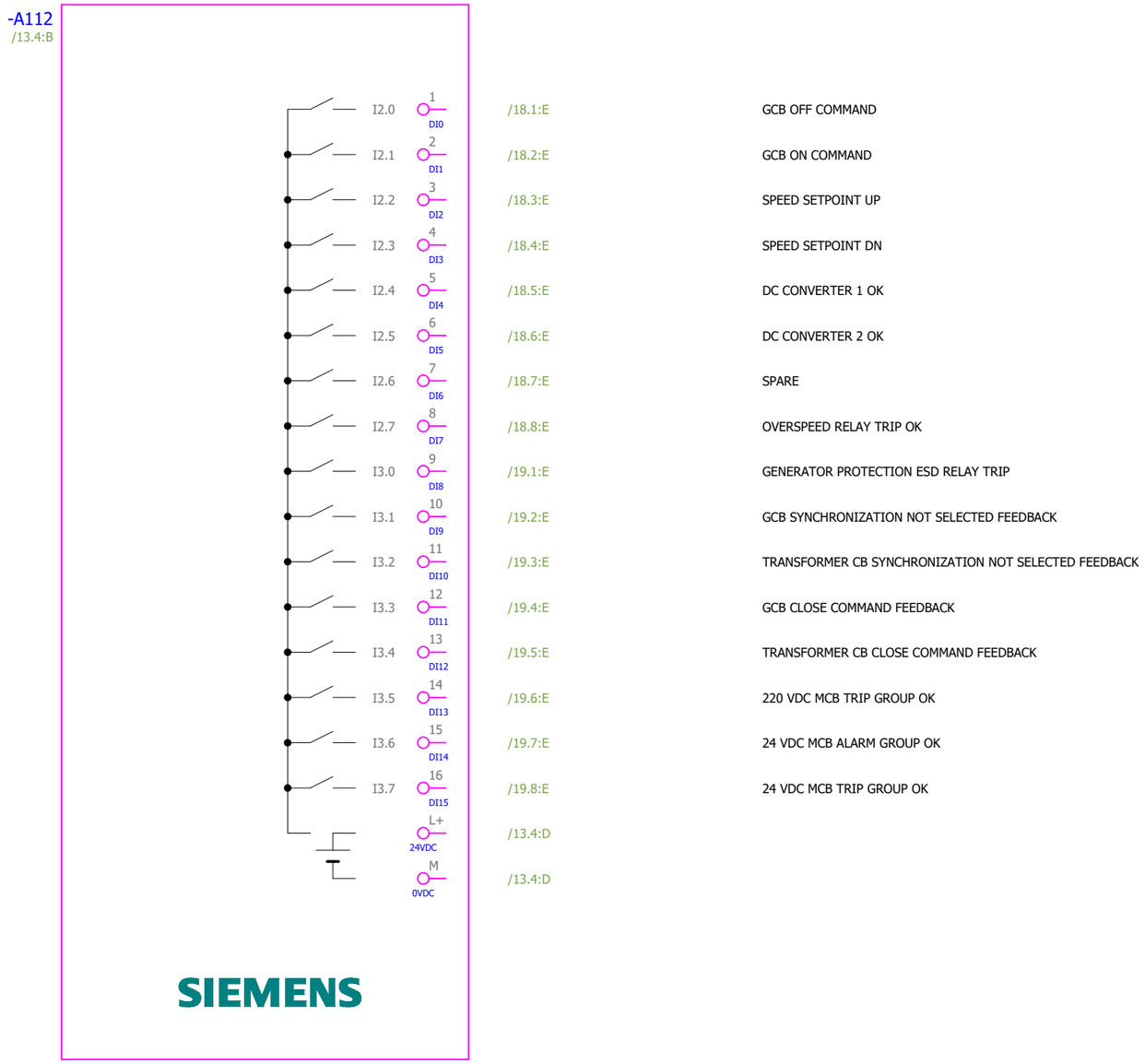

CONFIDENTIAL, ALL RIGHTS RESERVED DIN 34

Format ISO/DIN A3

Approved by Contractor			Reconstruction and Modernisation of HPP Perucica - Phase II	epcg	SINTAKSA A Voith Company Sintaksa - A Voith Company Ulica Domovinskog rata 104C, 21 000 Split, Hrvatska	Unit KA1 control cubicle circuit diagrams	DRAWING No.: PERU-01-19-170-31-001	REV No.: 02	= UACJA10GH100
Approved by Designer	Grga Kolić	15.6.2026.							+ UACJA10
Checked by	Antonio Aleksić	15.6.2026.				PLC OVERVIEW DI	Designer No.:	SALES No.:	PAGE 88
Drawn by	Tamara Trogrlić	15.6.2026.	PROJECT NAME	EMPLOYER	DESIGNER				PAGE 88 / 156

Qty. (pcs)	Equipment technical description	Manufacturer	Location (= / +)	Designation (-)	Symbol Position in shematics (Page, column)
1	Digital input module ET 200SP DI 16X24V DC Standard type 3 (IEC 61131); sink input; fits to BU-type A0 input delay time 0,05..20ms; Diagnostics: wire break, supply voltage 6ES7131-6BH01-0BA0 BaseUnit BU15-P16+A0+2B 6ES7193-6BP00-0BA0	Siemens	+UACJA10	-A113	

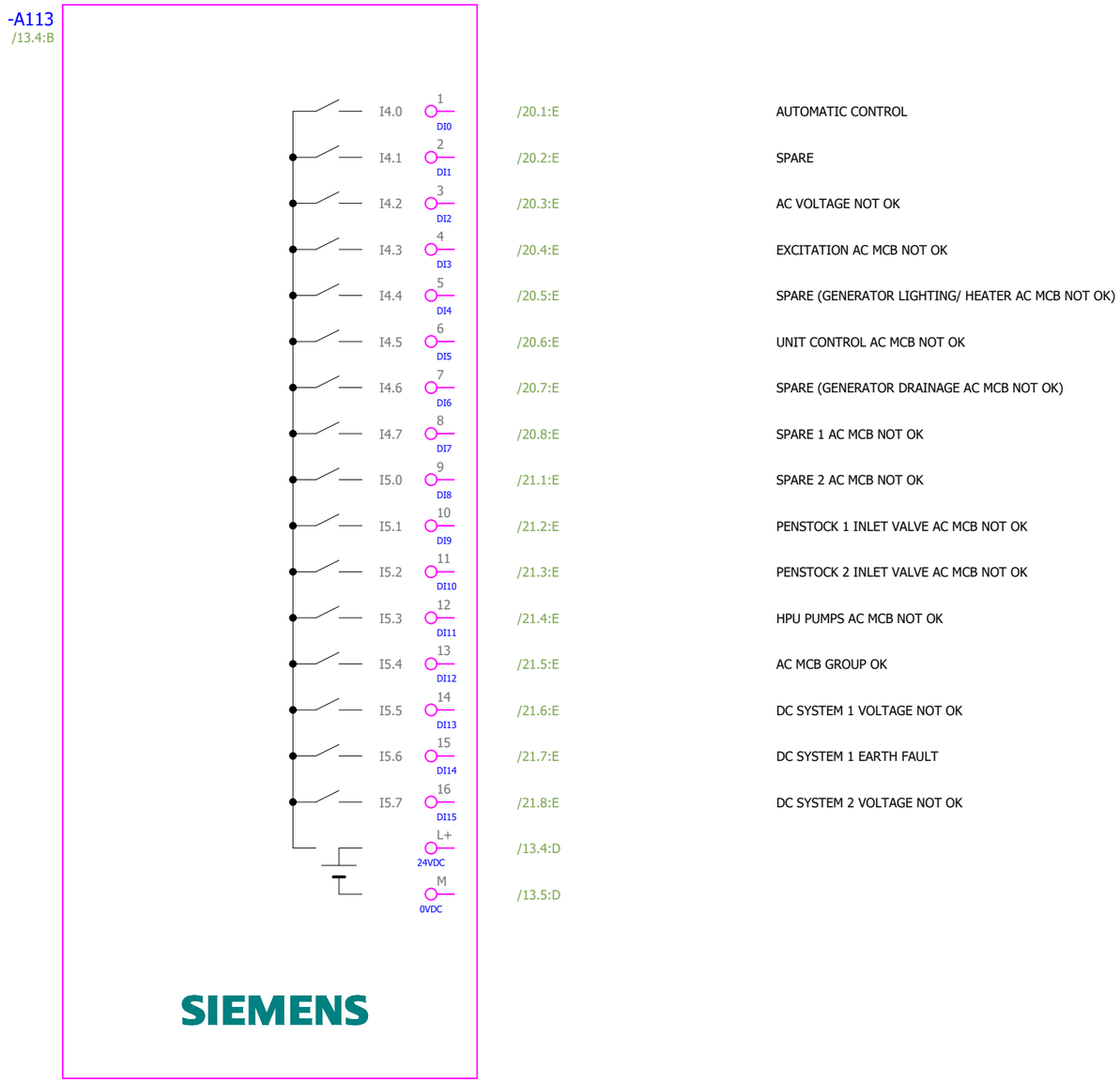

CONFIDENTIAL, ALL RIGHTS RESERVED DIN 34

Format ISO/DIN A3

Approved by Contractor			Reconstruction and Modernisation of HPP Perucica - Phase II	epcg	SINTAKSA A Voith Company Sintaksa - A Voith Company Ulica Domovinskog rata 104C, 21 000 Split, Hrvatska	Unit KA1 control cubicle circuit diagrams	DRAWING No.: PERU-01-19-170-31-001	REV No.: 02	= UACJA10GH100
Approved by Designer	Grga Kolić	15.6.2026.							+ UACJA10
Checked by	Antonio Aleksić	15.6.2026.				PLC OVERVIEW DI	Designer No.:	SALES No.:	PAGE 89
Drawn by	Tamara Trogrlić	15.6.2026.	PROJECT NAME	EMPLOYER	DESIGNER				PAGE 89 / 156

Qty. (pcs)	Equipment technical description	Manufacturer	Location (= / +)	Designation (-)	Symbol Position in shematics (Page, column)
1	Digital input module ET 200SP DI 16X24V DC Standard type 3 (IEC 61131); sink input; fits to BU-type A0 input delay time 0,05..20ms; Diagnostics: wire break, supply voltage 6ES7131-6BH01-0BA0 BaseUnit BU15-P16+A0+2B 6ES7193-6BP00-0BA0	Siemens	+UACJA10	-A114	

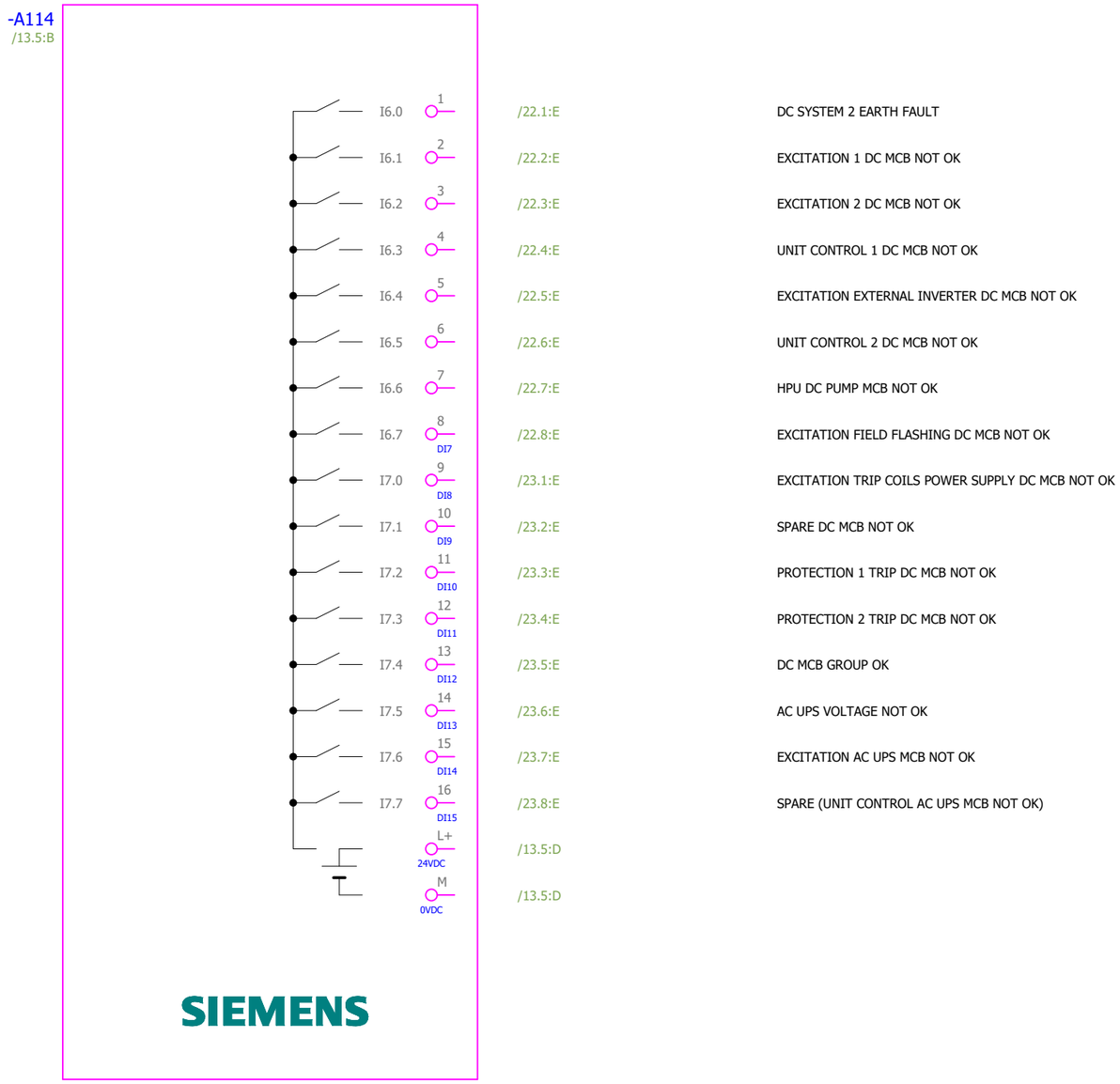

CONFIDENTIAL, ALL RIGHTS RESERVED DIN 34

Format ISO/DIN A3

Approved by Contractor			Reconstruction and Modernisation of HPP Perucica - Phase II	epcg	SINTAKSA A Voith Company Sintaksa - A Voith Company Ulica Domovinskog rata 104C, 21 000 Split, Hrvatska	Unit KA1 control cubicle circuit diagrams	DRAWING No.: PERU-01-19-170-31-001	REV No.: 02	= UACJA10GH100
Approved by Designer	Grga Kolić	15.6.2026.							+ UACJA10
Checked by	Antonio Aleksić	15.6.2026.				PLC OVERVIEW DI	Designer No.:	SALES No.:	PAGE 90
Drawn by	Tamara Trogrlić	15.6.2026.	PROJECT NAME	EMPLOYER	DESIGNER				PAGE 90 / 156

Qty. (pcs)	Equipment technical description	Manufacturer	Location (= / +)	Designation (-)	Symbol Position in shematics (Page, column)
1	Digital input module ET 200SP DI 16X24V DC Standard type 3 (IEC 61131); sink input; fits to BU-type A0 input delay time 0,05..20ms; Diagnostics: wire break, supply voltage 6ES7131-6BH01-0BA0 BaseUnit BU15-P16+A0+2B 6ES7193-6BP00-0BA0	Siemens	+UACJA10	-A115	

-A115
/13.5:B

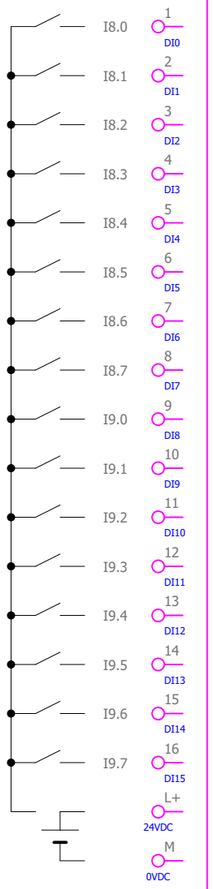

/24.1:E	SPARE AC UPS MCB NOT OK
/24.2:E	VIBRATION MONITORING AC UPS MCB NOT OK
/24.3:E	SPARE (MONITORING MECHANICAL AC UPS MCB NOT OK)
/24.4:E	AC UPS MCB GROUP OK
/24.5:E	UNIT GCB CONTROL MCB NOT OK
/24.6:E	+UV01 220 VDC POWER SUPPLY MCB NOT OK
/24.7:E	SPARE
/24.8:E	GENERATOR CIRCUIT BREAKER OPEN
/25.1:E	GENERATOR CIRCUIT BREAKER CLOSED
/25.2:E	GENERATOR CIRCUIT BREAKER IN OPERATING POSITION
/25.3:E	GENERATOR CIRCUIT BREAKER IN TEST POSITION
/25.4:E	TRANSFORMER 1 CIRCUIT BREAKER OPEN
/25.5:E	TRANSFORMER 1 CIRCUIT BREAKER CLOSED
/25.6:E	AUXILIARY POWER SUPPLY CIRCUIT BREAKERS LOCAL
/25.7:E	AUXILIARY POWER SUPPLY CIRCUIT BREAKERS REMOTE
/25.8:E	SPARE
/13.5:D	
/13.6:D	

CONFIDENTIAL, ALL RIGHTS RESERVED DIN 34

Format ISO/DIN A3

Approved by Contractor			Reconstruction and Modernisation of HPP Perucica - Phase II	epcg	SINTAKSA A Voith Company Sintaksa - A Voith Company Ulica Domovinskog rata 104C, 21 000 Split, Hrvatska	Unit KA1 control cubicle circuit diagrams	DRAWING No.: PERU-01-19-170-31-001	REV No.: 02	= UACJA10GH100
Approved by Designer	Grga Kolić	15.6.2026.							+ UACJA10
Checked by	Antonio Aleksić	15.6.2026.				PLC OVERVIEW DI	Designer No.:	SALES No.:	PAGE 91
Drawn by	Tamara Trogrlić	15.6.2026.	PROJECT NAME	EMPLOYER	DESIGNER				PAGE 91 / 156

Qty. (pcs)	Equipment technical description	Manufacturer	Location (= / +)	Designation (-)	Symbol Position in shematics (Page, column)
1	Digital input module ET 200SP DI 16X24V DC Standard type 3 (IEC 61131); sink input; fits to BU-type A0 input delay time 0,05..20ms; Diagnostics: wire break, supply voltage 6ES7131-6BH01-0BA0 BaseUnit BU15-P16+A0+2B 6ES7193-6BP00-0BA0	Siemens	+UACJA10	-A116	

-A116
/13.6:B

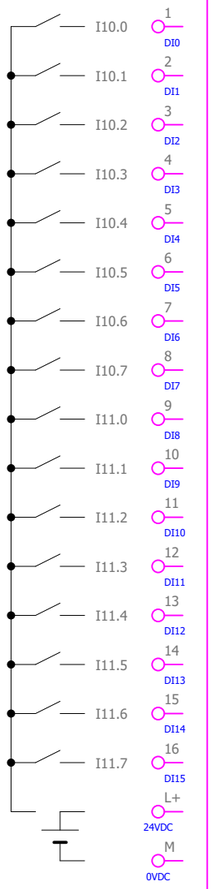

/26.1:E	SPARE	
/26.2:E	SPARE	
/26.3:E	SPARE	
/26.4:E	SPARE	
/26.5:E	GENERATOR PROTECTION TRIP EXCITATION	
/26.6:E	GENERATOR PROTECTION SYSTEM FAULT	
/26.7:E	GENERATOR CIRCUIT BREAKER PRIMARY PROTECTION TRIP	
/26.8:E	GCB TCS NOT OK	
/27.1:E	EXCITATION CB TCS NOT OK	
/27.2:E	GOVERNOR TCS NOT OK	
/27.3:E	GENERATOR PROTECTION TEST SWITCH ON	
/27.4:E	GENERATOR PROTECTION TRIP	
/27.5:E	VIBRATION MONITORING TRIP	
/27.6:E	SPARE	
/27.7:E	SPARE	
/27.8:E	SPARE	
/13.6:D		
/13.6:D		

CONFIDENTIAL, ALL RIGHTS RESERVED DIN 34

Format ISO/DIN A3

Approved by Contractor			Reconstruction and Modernisation of HPP Perucica - Phase II	epcg	SINTAKSA A Voith Company Sintaksa - A Voith Company Ulica Domovinskog rata 104C, 21 000 Split, Hrvatska	Unit KA1 control cubicle circuit diagrams	DRAWING No.: PERU-01-19-170-31-001	REV No.: 02	= UACJA10GH100
Approved by Designer	Grga Kolić	15.6.2026.				PLC OVERVIEW DI			+ UACJA10
Checked by	Antonio Aleksić	15.6.2026.					Designer No.:	SALES No.:	PAGE 92
Drawn by	Tamara Trogrlić	15.6.2026.	PROJECT NAME	EMPLOYER	DESIGNER				PAGE 92 / 156

Qty. (pcs)	Equipment technical description	Manufacturer	Location (= / +)	Designation (-)	Symbol Position in shematics (Page, column)
1	Digital input module ET 200SP DI 16X24V DC Standard type 3 (IEC 61131); sink input; fits to BU-type A0 input delay time 0,05..20ms; Diagnostics: wire break, supply voltage 6ES7131-6BH01-0BA0 BaseUnit BU15-P16+A0+2B 6ES7193-6BP00-0BA0	Siemens	+UACJA10	-A117	

CONFIDENTIAL, ALL RIGHTS RESERVED DIN 34

Format ISO/DIN A3

Approved by Contractor			Reconstruction and Modernisation of HPP Perucica - Phase II	epcg	SINTAKSA A Voith Company Sintaksa - A Voith Company Ulica Domovinskog rata 104C, 21 000 Split, Hrvatska	Unit KA1 control cubicle circuit diagrams	DRAWING No.: PERU-01-19-170-31-001	REV No.: 02	= UACJA10GH100
Approved by Designer	Grga Kolić	15.6.2026.							+ UACJA10
Checked by	Antonio Aleksić	15.6.2026.				PLC OVERVIEW DI	Designer No.:	SALES No.:	PAGE 93
Drawn by	Tamara Trogrlić	15.6.2026.	PROJECT NAME	EMPLOYER	DESIGNER				PAGE 93 / 156

Qty. (pcs)	Equipment technical description	Manufacturer	Location (= / +)	Designation (-)	Symbol Position in shematics (Page, column)
1	Digital input module ET 200SP DI 16X24V DC Standard type 3 (IEC 61131); sink input; fits to BU-type A0 input delay time 0,05..20ms; Diagnostics: wire break, supply voltage 6ES7131-6BH01-0BA0 BaseUnit BU15-P16+A0+2B 6ES7193-6BP00-0BA0	Siemens	+UACJA10	-A118	

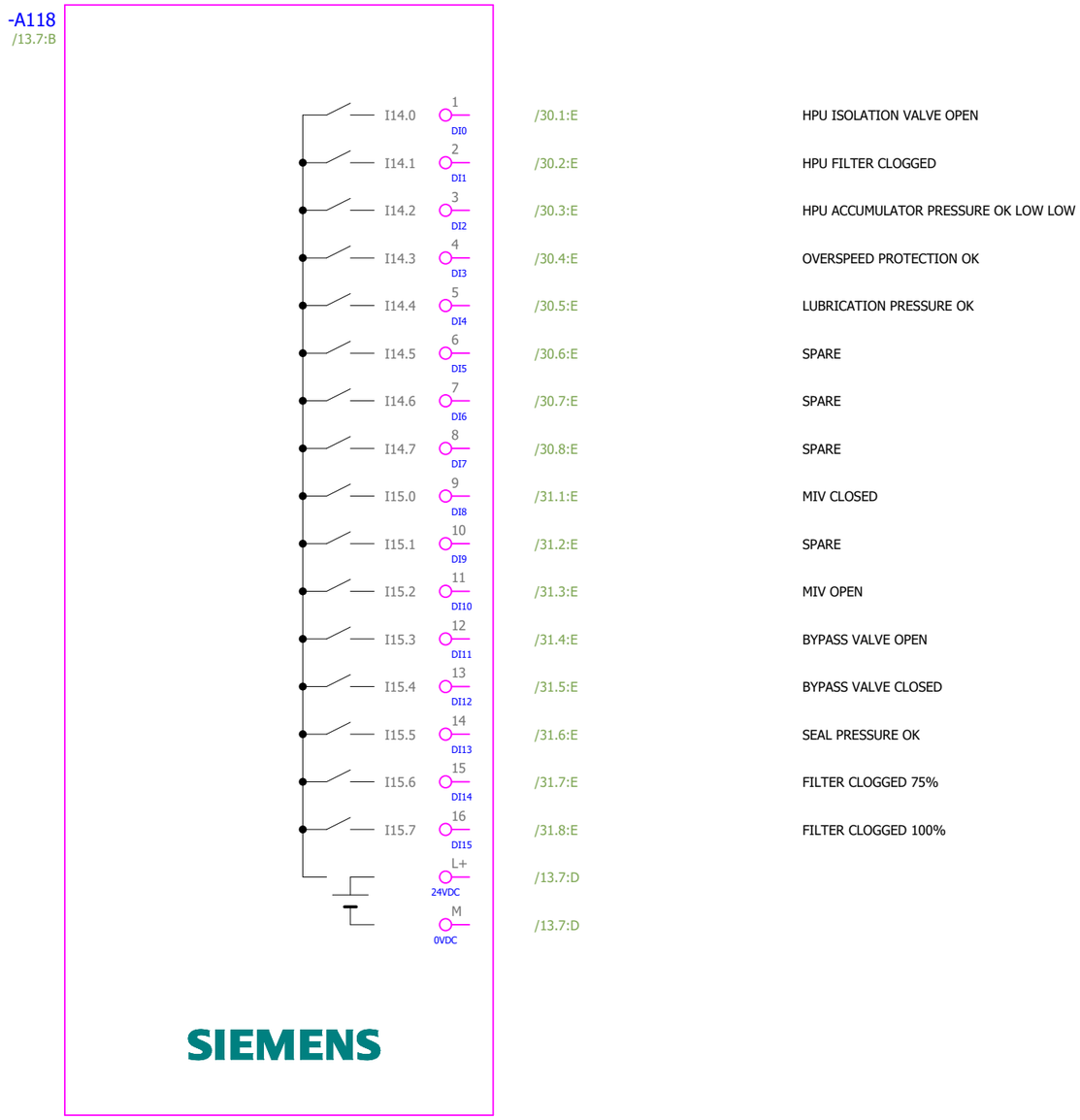

CONFIDENTIAL, ALL RIGHTS RESERVED DIN 34

Format ISO/DIN A3

Approved by Contractor			Reconstruction and Modernisation of HPP Perucica - Phase II	epcg	SINTAKSA A Voith Company Sintaksa - A Voith Company Ulica Domovinskog rata 104C, 21 000 Split, Hrvatska	Unit KA1 control cubicle circuit diagrams	DRAWING No.: PERU-01-19-170-31-001	REV No.: 02	= UACJA10GH100
Approved by Designer	Grga Kolić	15.6.2026.							+ UACJA10
Checked by	Antonio Aleksić	15.6.2026.				PLC OVERVIEW DI	Designer No.:	SALES No.:	PAGE 94
Drawn by	Tamara Trogrlić	15.6.2026.	PROJECT NAME	EMPLOYER	DESIGNER				PAGE 94 / 156

Qty. (pcs)	Equipment technical description	Manufacturer	Location (= / +)	Designation (-)	Symbol Position in shematics (Page, column)
1	Digital input module ET 200SP DI 16X24V DC Standard type 3 (IEC 61131); sink input; fits to BU-type A0 input delay time 0,05..20ms; Diagnostics: wire break, supply voltage 6ES7131-6BH01-0BA0 BaseUnit BU15-P16+A0+2B 6ES7193-6BP00-0BA0	Siemens	+UACJA10	-A119	

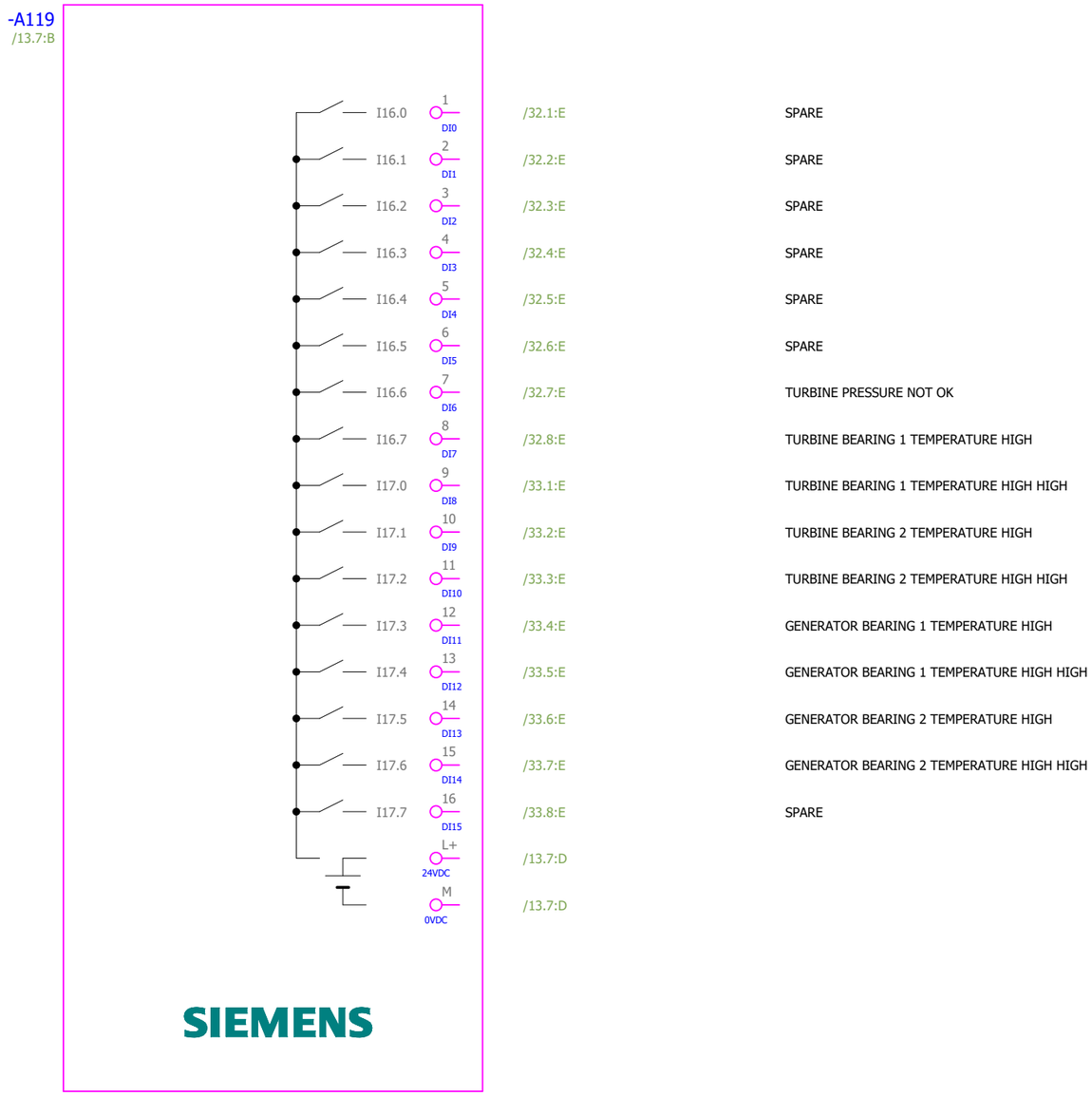

CONFIDENTIAL, ALL RIGHTS RESERVED DIN 34

Format ISO/DIN A3

Approved by Contractor			Reconstruction and Modernisation of HPP Perucica - Phase II	epcg	SINTAKSA A Voith Company Sintaksa - A Voith Company Ulica Domovinskog rata 104C, 21 000 Split, Hrvatska	Unit KA1 control cubicle circuit diagrams	DRAWING No.: PERU-01-19-170-31-001	REV No.: 02	= UACJA10GH100
Approved by Designer	Grga Kolić	15.6.2026.							+ UACJA10
Checked by	Antonio Aleksić	15.6.2026.				PLC OVERVIEW DI	Designer No.:	SALES No.:	PAGE 95
Drawn by	Tamara Trogrlić	15.6.2026.	PROJECT NAME	EMPLOYER	DESIGNER				PAGE 95 / 156

Qty. (pcs)	Equipment technical description	Manufacturer	Location (= / +)	Designation (-)	Symbol Position in shematics (Page, column)
1	Digital input module ET 200SP DI 16X24V DC Standard type 3 (IEC 61131); sink input; fits to BU-type A0 input delay time 0,05..20ms; Diagnostics: wire break, supply voltage 6ES7131-6BH01-0BA0 BaseUnit BU15-P16+A0+2B 6ES7193-6BP00-0BA0	Siemens	+UACJA10	-A120	

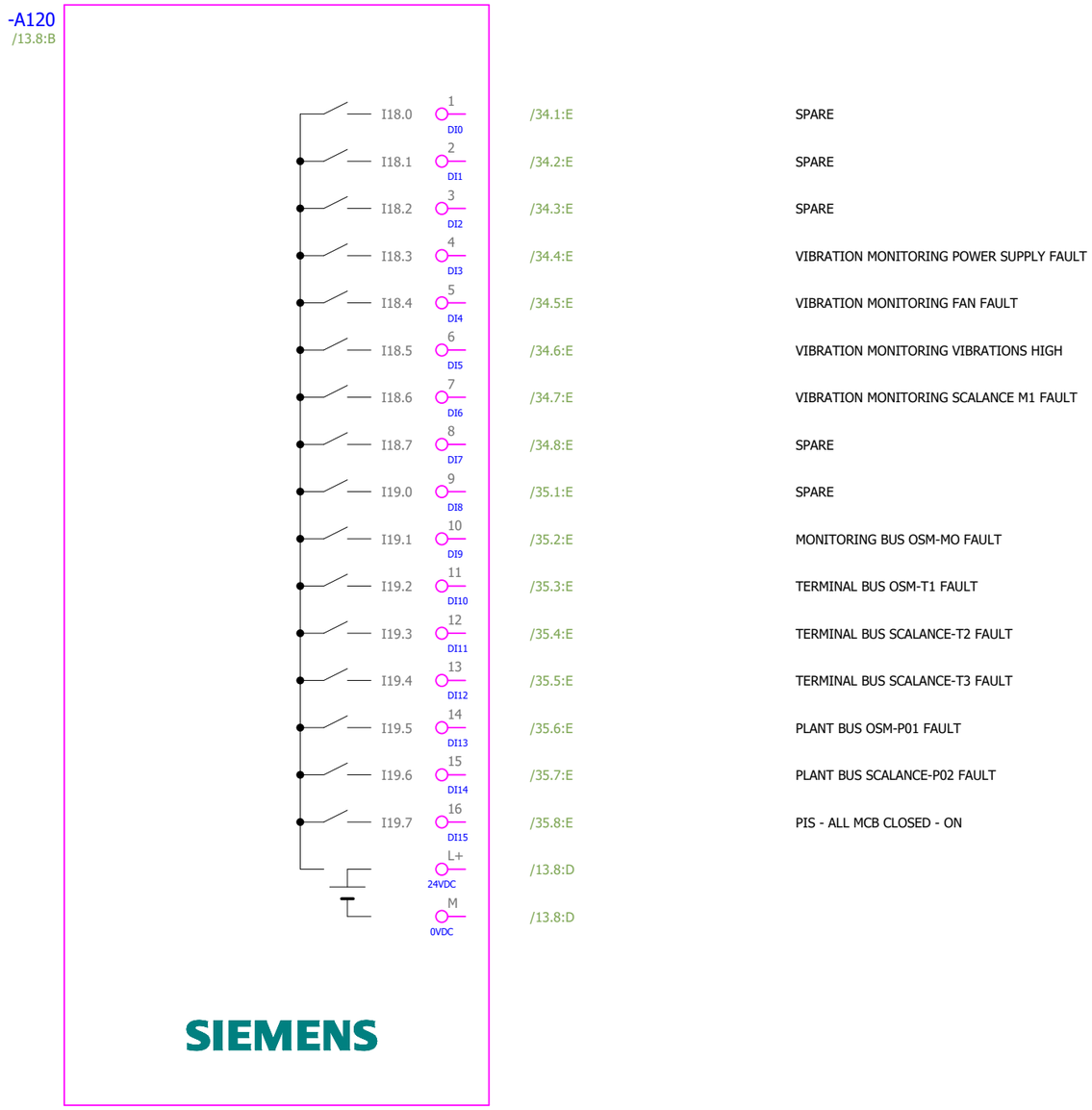

CONFIDENTIAL, ALL RIGHTS RESERVED DIN 34

Format ISO/DIN A3

Approved by Contractor			Reconstruction and Modernisation of HPP Perucica - Phase II	epcg	SINTAKSA A Voith Company Sintaksa - A Voith Company Ulica Domovinskog rata 104C, 21 000 Split, Hrvatska	Unit KA1 control cubicle circuit diagrams	DRAWING No.: PERU-01-19-170-31-001	REV No.: 02	= UACJA10GH100
Approved by Designer	Grga Kolić	15.6.2026.							+ UACJA10
Checked by	Antonio Aleksić	15.6.2026.				PLC OVERVIEW DI	Designer No.:	SALES No.:	PAGE 96
Drawn by	Tamara Trogrlić	15.6.2026.	PROJECT NAME	EMPLOYER	DESIGNER				PAGE 96 / 156

Qty. (pcs)	Equipment technical description	Manufacturer	Location (= / +)	Designation (-)	Symbol Position in shematics (Page, column)
1	Digital output module ET200SP DQ 16x 24V DC/0,5A fits to BU-type A0; Source output (PNP/P-switching); substitute value output, Module diagnostics: short-circuit to L+ and ground, wire break, supply 6ES7132-6BH01-0BA0 BaseUnit BU15-P16+A0+2D 6ES7193-6BP00-0DA0	Siemens	+UACJA10	-A131	

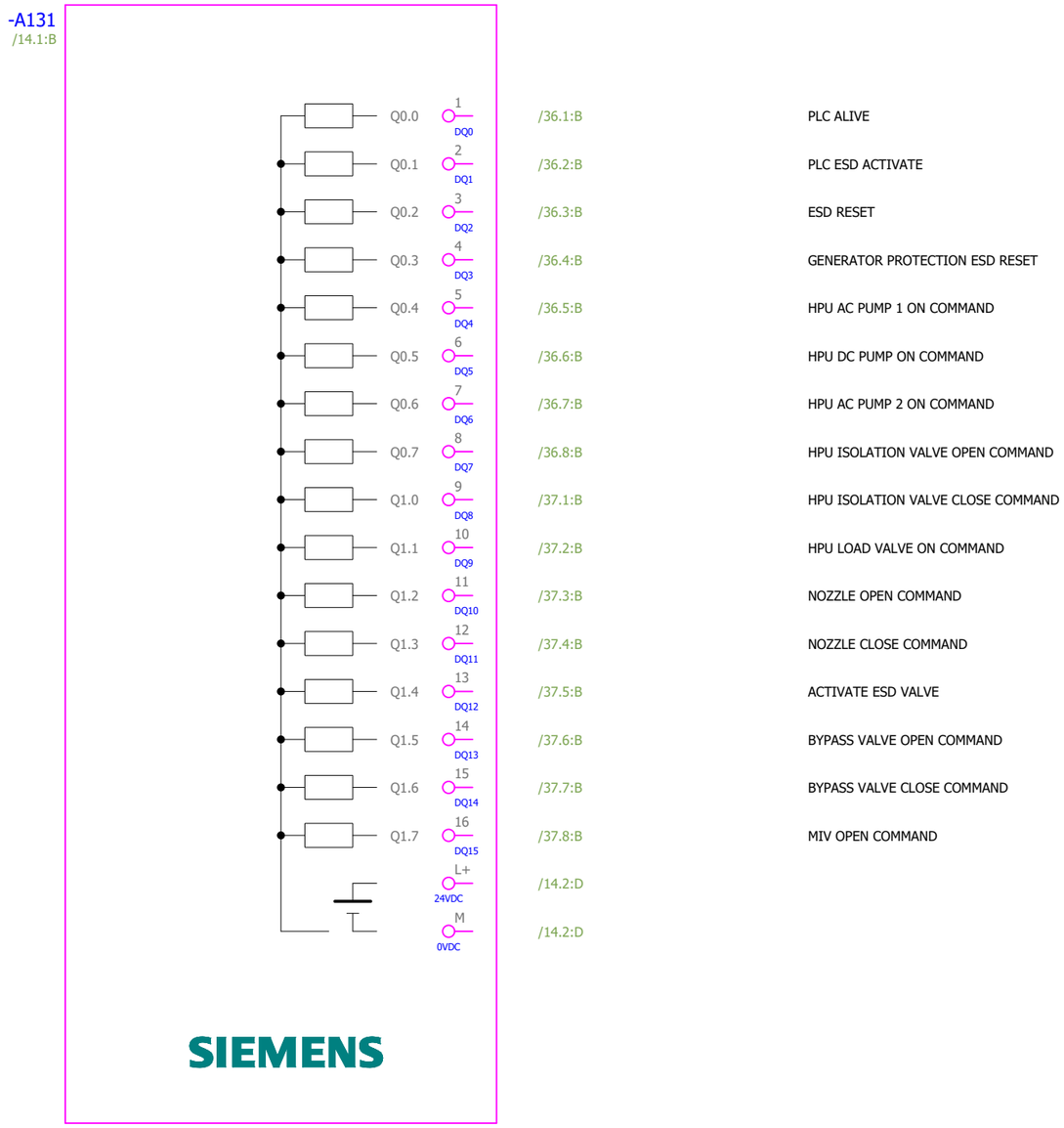

CONFIDENTIAL, ALL RIGHTS RESERVED DIN 34

Format ISO/DIN A3

Approved by Contractor			Reconstruction and Modernisation of HPP Perucica - Phase II	epcg	SINTAKSA A Voith Company Sintaksa - A Voith Company Ulica Domovinskog rata 104C, 21 000 Split, Hrvatska	Unit KA1 control cubicle circuit diagrams	DRAWING No.: PERU-01-19-170-31-001	REV No.: 02	= UACJA10GH100
Approved by Designer	Grga Kolić	15.6.2026.							+ UACJA10
Checked by	Antonio Aleksić	15.6.2026.				PLC OVERVIEW DQ	Designer No.:	SALES No.:	PAGE 97
Drawn by	Tamara Trogrlić	15.6.2026.	PROJECT NAME	EMPLOYER	DESIGNER				PAGE 97 / 156

Qty. (pcs)	Equipment technical description	Manufacturer	Location (= / +)	Designation (-)	Symbol Position in shematics (Page, column)
1	Digital output module ET200SP DQ 16x 24V DC/0,5A fits to BU-type A0; Source output (PNP/P-switching); substitute value output, Module diagnostics: short-circuit to L+ and ground, wire break, supply 6ES7132-6BH01-0BA0 BaseUnit BU15-P16+A0+2B 6ES7193-6BP00-0BA0	Siemens	+UACJA10	-A132	

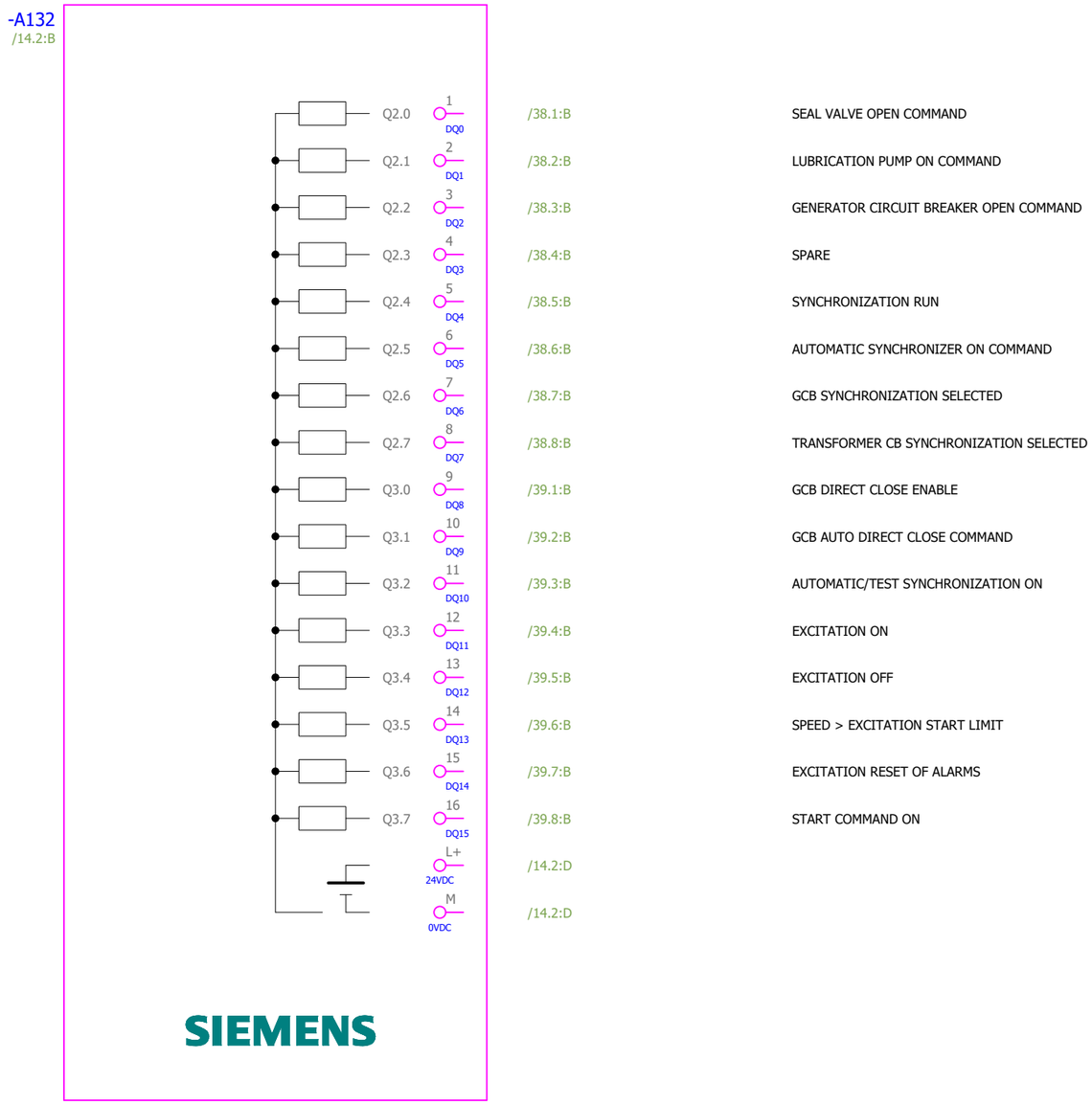

CONFIDENTIAL, ALL RIGHTS RESERVED DIN 34

Format ISO/DIN A3

Approved by Contractor			Reconstruction and Modernisation of HPP Perucica - Phase II	epcg	SINTAKSA A Voith Company Sintaksa - A Voith Company Ulica Domovinskog rata 104C, 21 000 Split, Hrvatska	Unit KA1 control cubicle circuit diagrams	DRAWING No.: PERU-01-19-170-31-001	REV No.: 02	= UACJA10GH100
Approved by Designer	Grga Kolić	15.6.2026.							+ UACJA10
Checked by	Antonio Aleksić	15.6.2026.				PLC OVERVIEW DQ	Designer No.:	SALES No.:	PAGE 98
Drawn by	Tamara Trogrlić	15.6.2026.	PROJECT NAME	EMPLOYER	DESIGNER				PAGE 98 / 156

Qty. (pcs)	Equipment technical description	Manufacturer	Location (= / +)	Designation (-)	Symbol Position in shematics (Page, column)
1	Digital output module ET200SP DQ 16x 24V DC/0,5A fits to BU-type A0; Source output (PNP/P-switching); substitute value output, Module diagnostics: short-circuit to L+ and ground, wire break, supply 6ES7132-6BH01-0BA0 BaseUnit BU15-P16+A0+2B 6ES7193-6BP00-0BA0	Siemens	+UACJA10	-A133	

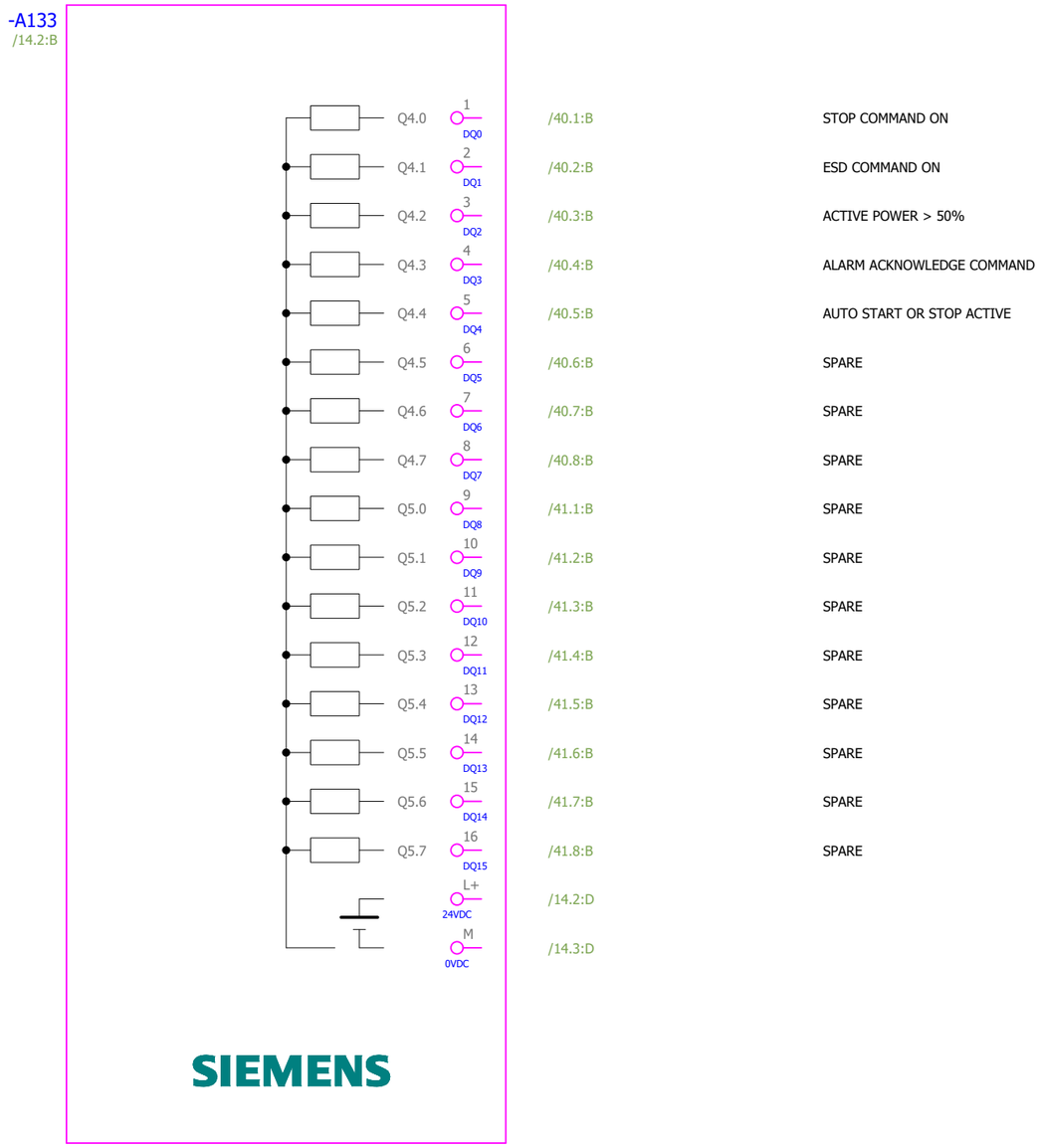

CONFIDENTIAL, ALL RIGHTS RESERVED DIN 34

Format ISO/DIN A3

Approved by Contractor			Reconstruction and Modernisation of HPP Perucica - Phase II	epcg	SINTAKSA A Voith Company Sintaksa - A Voith Company Ulica Domovinskog rata 104C, 21 000 Split, Hrvatska	Unit KA1 control cubicle circuit diagrams	DRAWING No.: PERU-01-19-170-31-001	REV No.: 02	= UACJA10GH100
Approved by Designer	Grga Kolić	15.6.2026.							+ UACJA10
Checked by	Antonio Aleksić	15.6.2026.				PLC OVERVIEW DQ	Designer No.:	SALES No.:	PAGE 99
Drawn by	Tamara Trogrlić	15.6.2026.	PROJECT NAME	EMPLOYER	DESIGNER				PAGE 99 / 156

Qty. (pcs)	Equipment technical description	Manufacturer	Location (= / +)	Designation (-)	Symbol Position in shematics (Page, column)
1	Digital output module ET200SP DQ 16x 24V DC/0,5A fits to BU-type A0; Source output (PNP/P-switching); substitute value output, Module diagnostics: short-circuit to L+ and ground, wire break, supply 6ES7132-6BH01-0BA0 BaseUnit BU15-P16+A0+2B 6ES7193-6BP00-0BA0	Siemens	+UACJA10	-A134	

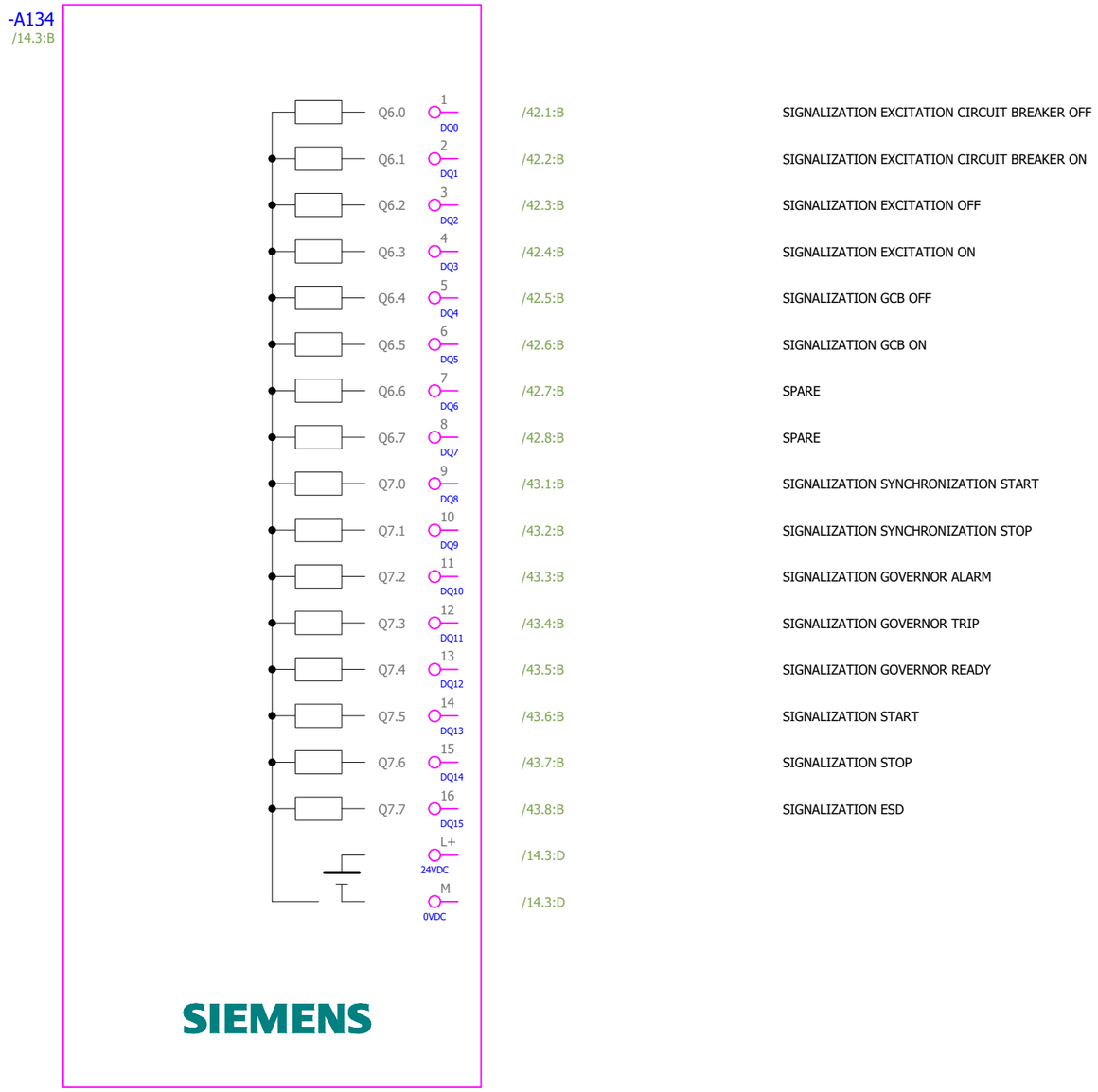

CONFIDENTIAL, ALL RIGHTS RESERVED DIN 34

Format ISO/DIN A3

Approved by Contractor			Reconstruction and Modernisation of HPP Perucica - Phase II	epcg	SINTAKSA A Voith Company Sintaksa - A Voith Company Ulica Domovinskog rata 104C, 21 000 Split, Hrvatska	Unit KA1 control cubicle circuit diagrams	DRAWING No.: PERU-01-19-170-31-001	REV No.: 02	= UACJA10GH100
Approved by Designer	Grga Kolić	15.6.2026.				PLC OVERVIEW DQ			+ UACJA10
Checked by	Antonio Aleksić	15.6.2026.					Designer No.:	SALES No.:	PAGE 100
Drawn by	Tamara Trogrlić	15.6.2026.	PROJECT NAME	EMPLOYER	DESIGNER				PAGE 100 / 156

Qty. (pcs)	Equipment technical description	Manufacturer	Location (= / +)	Designation (-)	Symbol Position in shematics (Page, column)
1	Analog input module SIMATIC ET 200SP AI 4XI 2-/4-WIRE Standard fits to BU-TYPE A0, A1 Module diagnosis, 16 bit, +/-0,3% 6ES7134-6GD01-0BA1 BaseUnit BU15-P16+A0+2D 6ES7193-6BP00-0DA0	Siemens	+UACJA10	-A141	

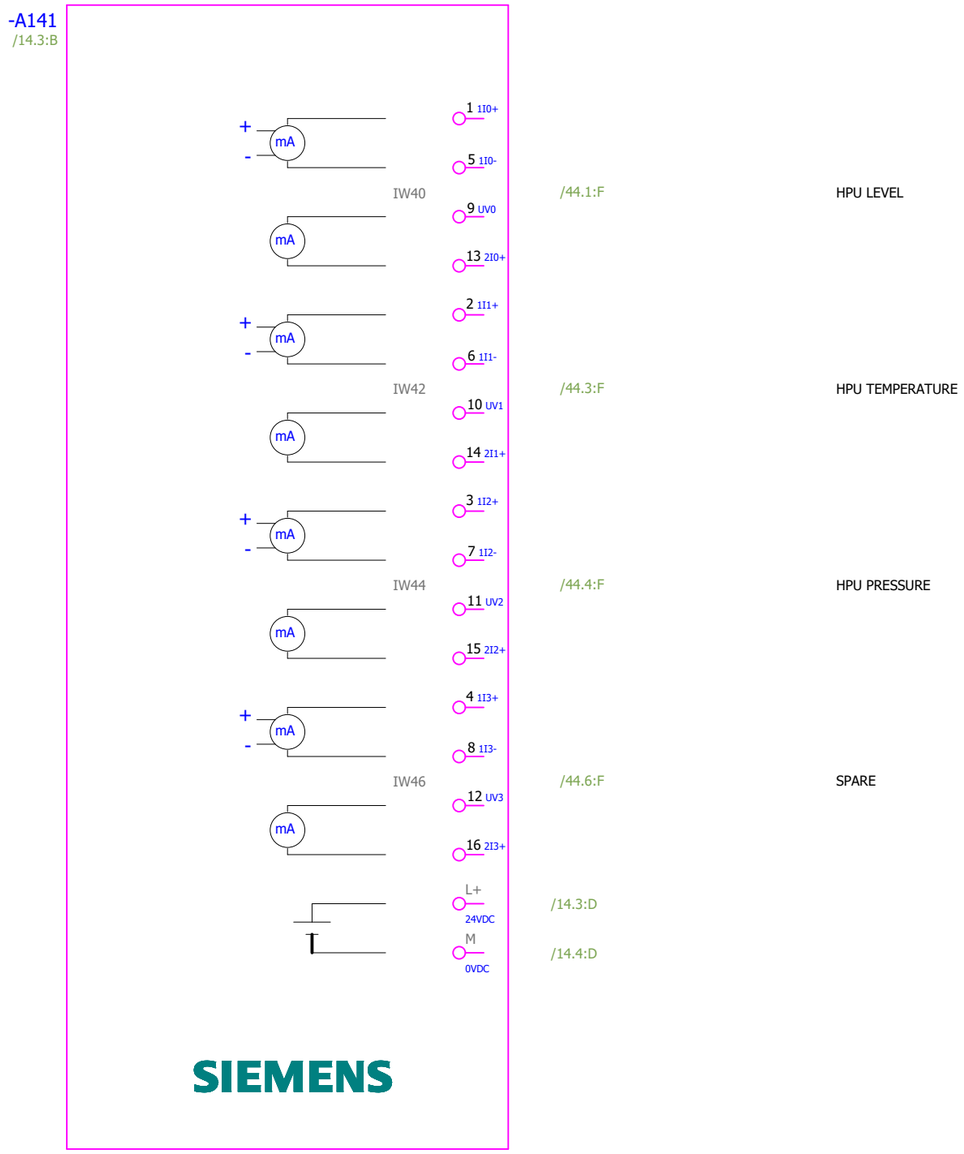

CONFIDENTIAL, ALL RIGHTS RESERVED DIN 34

Format ISO/DIN A3

Approved by Contractor			Reconstruction and Modernisation of HPP Perucica - Phase II	epcg	SINTAKSA A Voith Company Sintaksa - A Voith Company Ulica Domovinskog rata 104C, 21 000 Split, Hrvatska	Unit KA1 control cubicle circuit diagrams	DRAWING No.: PERU-01-19-170-31-001	REV No.: 02	= UACJA10GH100
Approved by Designer	Grga Kolić	15.6.2026.							+ UACJA10
Checked by	Antonio Aleksić	15.6.2026.				PLC OVERVIEW AI 4XI	Designer No.:	SALES No.:	PAGE 101
Drawn by	Tamara Trogrlić	15.6.2026.	PROJECT NAME	EMPLOYER	DESIGNER				PAGE 101 / 156

Qty. (pcs)	Equipment technical description	Manufacturer	Location (= / +)	Designation (-)	Symbol Position in shematics (Page, column)
1	Analog input module for ET 200SP Analog input module for ET200SP, Type: AI 2XI 2-/4-WIRE Standard 6ES7134-6GB00-0BA1 BaseUnit BU15-P16+A0+2B 6ES7193-6BP00-0BA0	Siemens	+UACJA10	-A151	

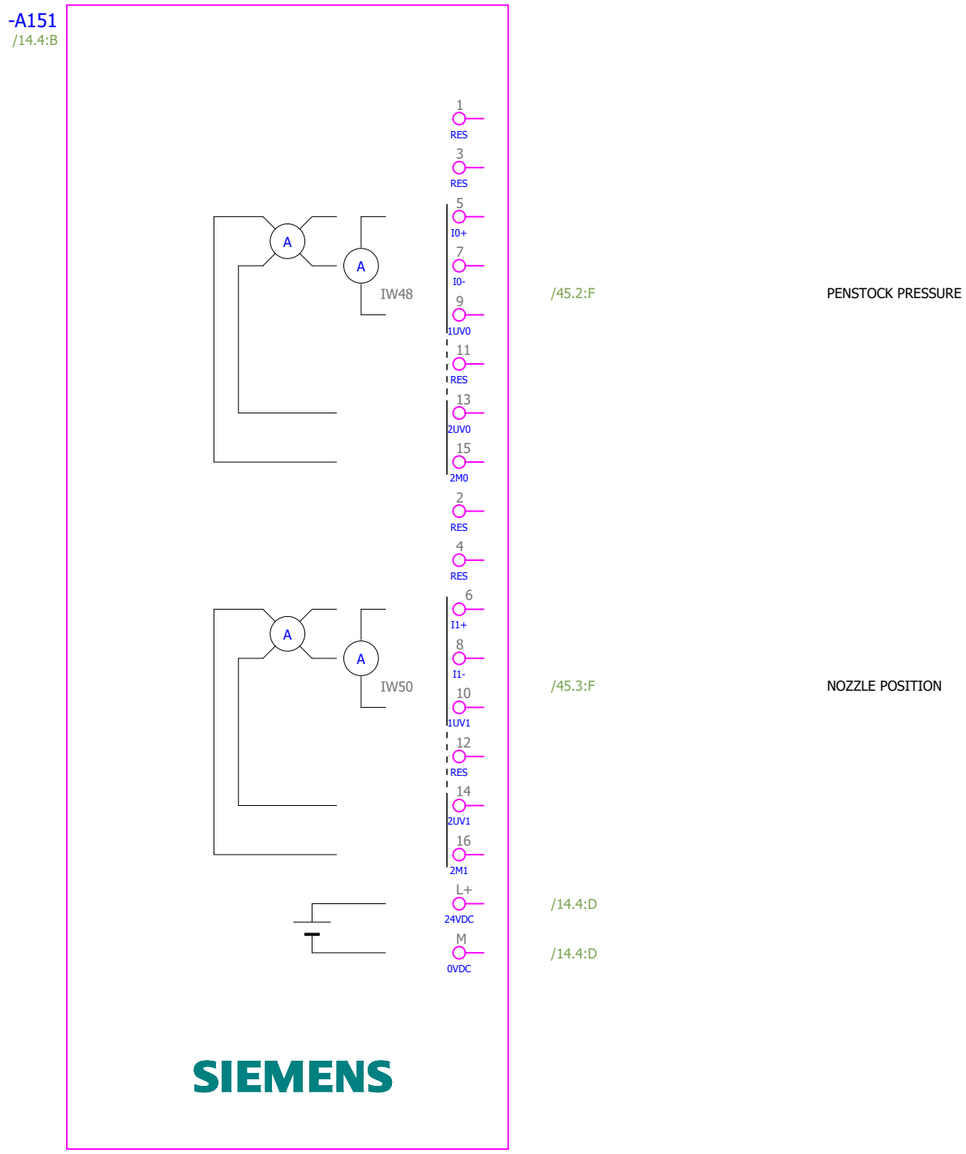

CONFIDENTIAL, ALL RIGHTS RESERVED DIN 34

Format ISO/DIN A3

Approved by Contractor			Reconstruction and Modernisation of HPP Perucica - Phase II	epcg	SINTAKSA A Voith Company Sintaksa - A Voith Company Ulica Domovinskog rata 104C, 21 000 Split, Hrvatska	Unit KA1 control cubicle circuit diagrams	DRAWING No.: PERU-01-19-170-31-001	REV No.: 02	= UACJA10GH100
Approved by Designer	Grga Kolić	15.6.2026.							+ UACJA10
Checked by	Antonio Aleksić	15.6.2026.				PLC OVERVIEW AI 2XI	Designer No.:	SALES No.:	PAGE 102
Drawn by	Tamara Trogrlić	15.6.2026.	PROJECT NAME	EMPLOYER	DESIGNER				PAGE 102 / 156

Qty. (pcs)	Equipment technical description	Manufacturer	Location (= / +)	Designation (-)	Symbol Position in shematics (Page, column)
1	Analog input module for ET 200SP Analog input module for ET200SP, Type: AI 2XI 2-/4-WIRE Standard 6ES7134-6GB00-0BA1 BaseUnit BU15-P16+A0+2B 6ES7193-6BP00-0BA0	Siemens	+UACJA10	-A152	

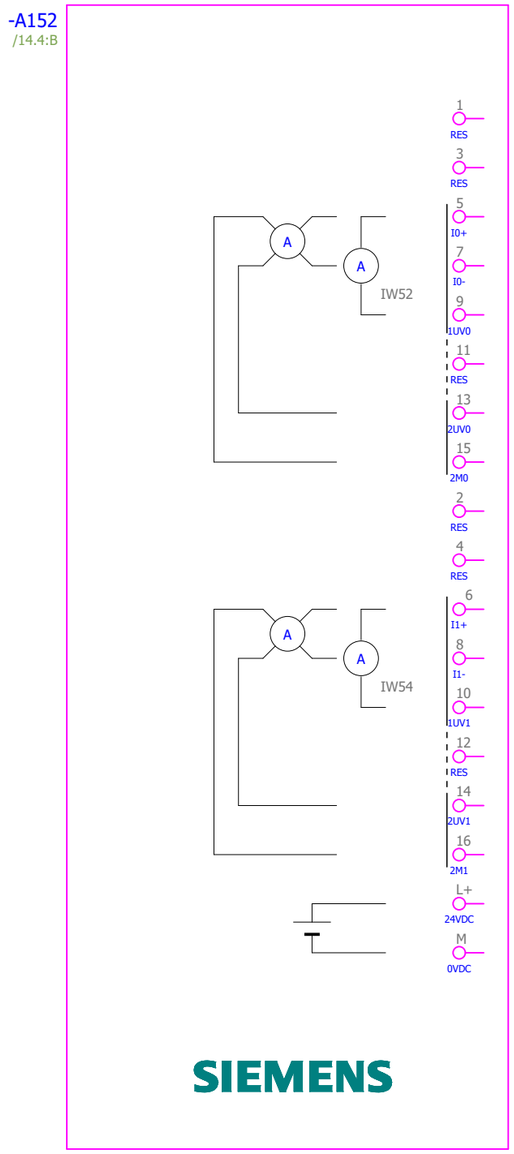

/45.5:F SPEED MEASUREMENT 2

/45.6:F SPARE

/14.4:D

/14.5:D

CONFIDENTIAL, ALL RIGHTS RESERVED DIN 34

Format ISO/DIN A3

Approved by Contractor			Reconstruction and Modernisation of HPP Perucica - Phase II	epcg	SINTAKSA A Voith Company Sintaksa - A Voith Company Ulica Domovinskog rata 104C, 21 000 Split, Hrvatska	Unit KA1 control cubicle circuit diagrams	DRAWING No.:	REV No.:	= UACJA10GH100
Approved by Designer	Grga Kolić	15.6.2026.					PERU-01-19-170-31-001	02	+ UACJA10
Checked by	Antonio Aleksić	15.6.2026.				PLC OVERVIEW AI 2XI	Designer No.:	SALES No.:	PAGE 103
Drawn by	Tamara Trogrlić	15.6.2026.	PROJECT NAME	EMPLOYER	DESIGNER				PAGE 103 / 156

Qty. (pcs)	Equipment technical description	Manufacturer	Location (= / +)	Designation (-)	Symbol Position in shematics (Page, column)
1	Analog output module SIMATIC ET 200SP, Analog output module, AQ 4XU/I Standard, suitable for BU type A0, A1, Color code CC00, Module diagnostics, 16 bit, +/-0.3% 6ES7135-6HD00-0BA1 BaseUnit BU15-P16+A0+2B 6ES7193-6BP00-0BA0	Siemens	+UACJA10	-A161	

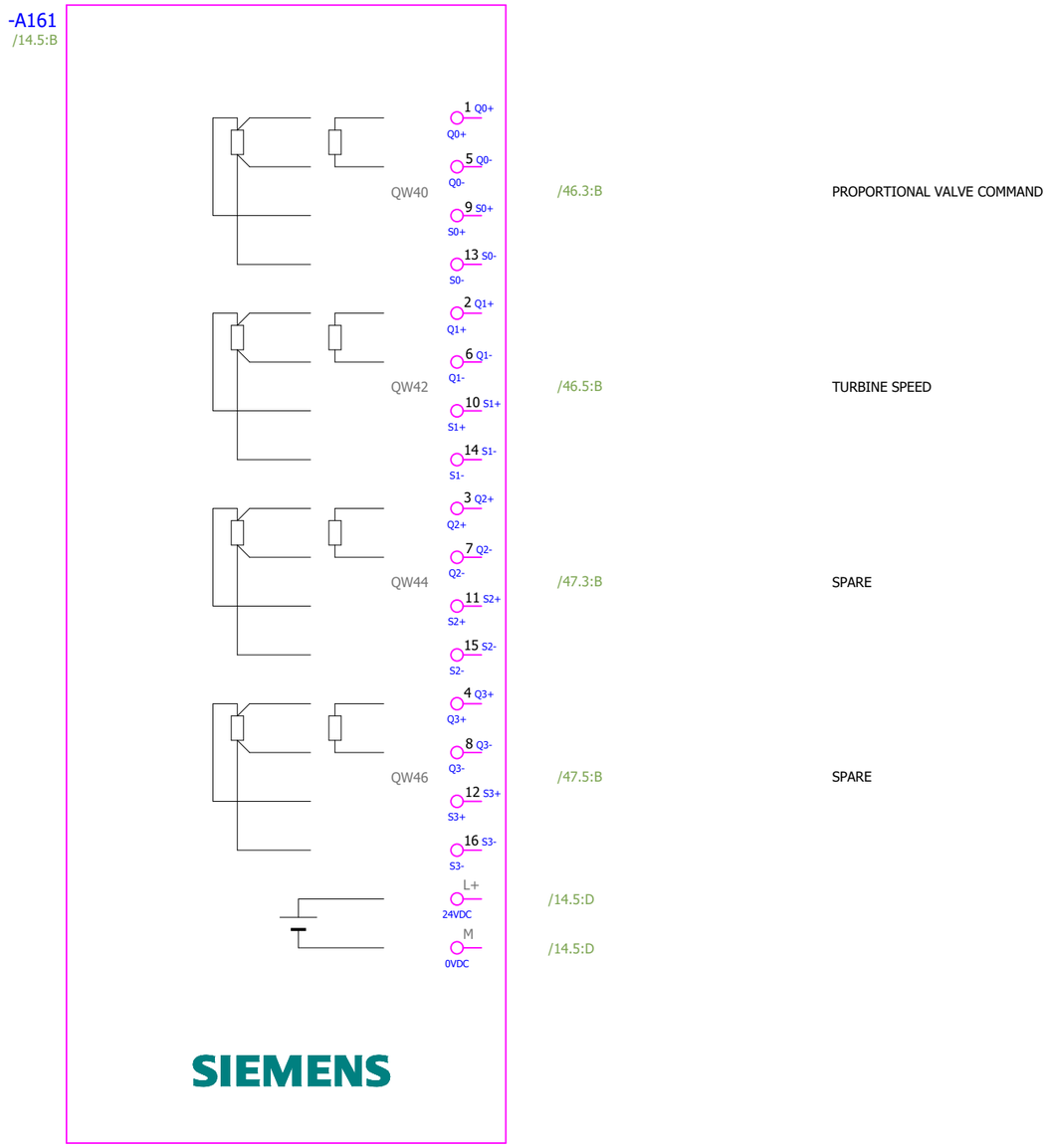

CONFIDENTIAL, ALL RIGHTS RESERVED DIN 34

Format ISO/DIN A3

Approved by Contractor			Reconstruction and Modernisation of HPP Perucica - Phase II	epcg	SINTAKSA A Voith Company Sintaksa - A Voith Company Ulica Domovinskog rata 104C, 21 000 Split, Hrvatska	Unit KA1 control cubicle circuit diagrams PLC OVERVIEW AQ	DRAWING No.: PERU-01-19-170-31-001	REV No.: 02	= UACJA10GH100 + UACJA10
Approved by Designer	Grga Kolić	15.6.2026.					Designer No.:	SALES No.:	PAGE 104
Checked by	Antonio Aleksić	15.6.2026.							PAGE 104 / 156
Drawn by	Tamara Trogrlić	15.6.2026.	PROJECT NAME	EMPLOYER	DESIGNER				

Qty. (pcs)	Equipment technical description	Manufacturer	Location (= / +)	Designation (-)	Symbol Position in shematics (Page, column)
1	SIMATIC ET 200SP AI Energy Meter CT ST SIMATIC ET 200SP, analog input module, AI Energy Meter CT ST, for 1A or 5A current transformer, suitable for BU type U0, channel diagnostics 6ES7134-6PA01-0BU0 SIMATIC ET 200SP BU type U0 BU20-P16+A0+2D PU 1 6ES7193-6BP00-0DU0	Siemens	+UACJA10	-A171	

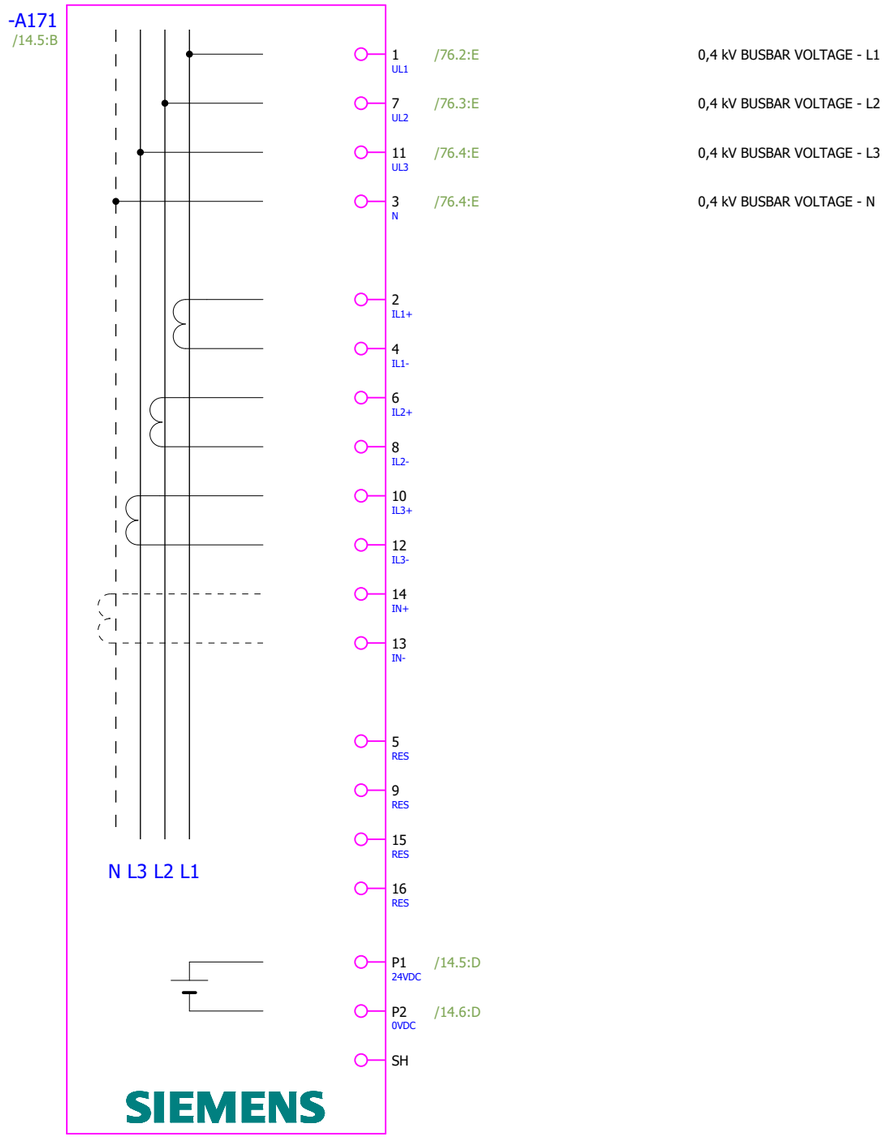

CONFIDENTIAL, ALL RIGHTS RESERVED DIN 34

Format ISO/DIN A3

Approved by Contractor			Reconstruction and Modernisation of HPP Perucica - Phase II	epcg	SINTAKSA A Voith Company Sintaksa - A Voith Company Ulica Domovinskog rata 104C, 21 000 Split, Hrvatska	Unit KA1 control cubicle circuit diagrams	DRAWING No.: PERU-01-19-170-31-001	REV No.: 02	= UACJA10GH100
Approved by Designer	Grga Kolić	15.6.2026.							+ UACJA10
Checked by	Antonio Aleksić	15.6.2026.				PLC OVERVIEW AI ENERGY METER	Designer No.:	SALES No.:	PAGE 105
Drawn by	Tamara Trogrlić	15.6.2026.	PROJECT NAME	EMPLOYER	DESIGNER				PAGE 105 / 156

Qty. (pcs)	Equipment technical description	Manufacturer	Location (= / +)	Designation (-)	Symbol Position in shematics (Page, column)
1	Power monitoring device Type: SENTRON PAC3220 Power supply: 24 ... 60 VDC -20/+10 % LCD 96x96mm protocol: Modbus TCP input: 690/400V 45-65Hz IE rated input: X/1A oder X/5A 7KM3220-1BA01-1EA0 SENTRON Switched Ethernet PROFINET V3 expansion module 7KM9300-0AE02-0AA0	Siemens	+UACJA10	-P101	

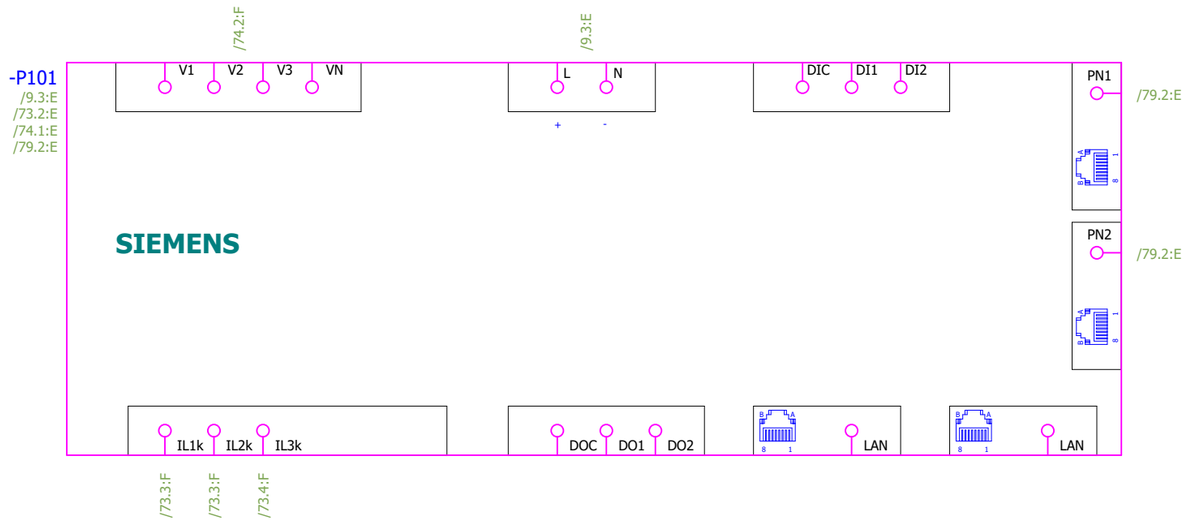

CONFIDENTIAL, ALL RIGHTS RESERVED DIN 34

Format ISO/DIN A3

Approved by Contractor			Reconstruction and Modernisation of HPP Perucica - Phase II	epcg	SINTAKSA A Voith Company Sintaksa - A Voith Company Ulica Domovinskog rata 104C, 21 000 Split, Hrvatska	Unit KA1 control cubicle circuit diagrams MULTIMETER	DRAWING No.: PERU-01-19-170-31-001	REV No.: 02	= UACJA10GH100 + UACJA10
Approved by Designer	Grga Kolić	15.6.2026.					Designer No.:	SALES No.:	PAGE 106
Checked by	Antonio Aleksić	15.6.2026.							PAGE 106 / 156
Drawn by	Tamara Trogrlić	15.6.2026.	PROJECT NAME	EMPLOYER	DESIGNER				

Qty. (pcs)	Equipment technical description	Manufacturer	Location (= / +)	Designation (-)	Symbol Position in shematics (Page, column)
1	Ethernet switch 24 V DC 8x 10/100 Mbit/s twisted pair ports with RJ45 sockets LED diagnostics Type: Scalance XB008 Order No.: 6GK5008-0BA10-1AB2 6GK5008-0BA10-1AB2	Siemens	+UACJA10	-U300	

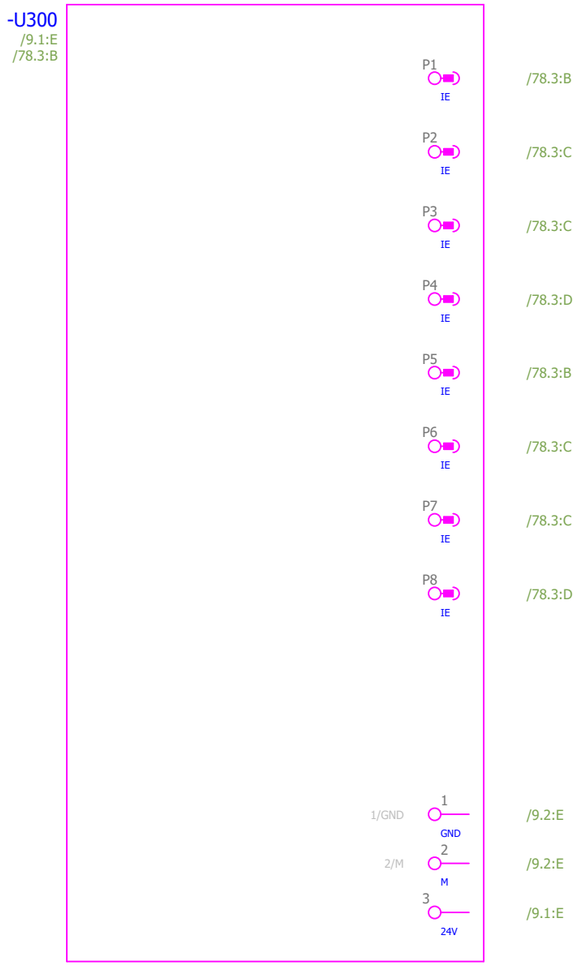

CONFIDENTIAL, ALL RIGHTS RESERVED DIN 34

Format ISO/DIN A3

Approved by Contractor			Reconstruction and Modernisation of HPP Perucica - Phase II	epcg	SINTAKSA A Voith Company Sintaksa - A Voith Company Ulica Domovinskog rata 104C, 21 000 Split, Hrvatska	Unit KA1 control cubicle circuit diagrams SWITCH 1	DRAWING No.: PERU-01-19-170-31-001	REV No.: 02	= UACJA10GH100 + UACJA10
Approved by Designer	Grga Kolić	15.6.2026.					Designer No.:	SALES No.:	PAGE 107
Checked by	Antonio Aleksić	15.6.2026.							PAGE 107 / 156
Drawn by	Tamara Trogrlić	15.6.2026.	PROJECT NAME	EMPLOYER	DESIGNER				

Qty. (pcs)	Equipment technical description	Manufacturer	Location (= / +)	Designation (-)	Symbol Position in shematics (Page, column)
1	Ethernet switch 24 V DC 8x 10/100 Mbit/s twisted pair ports with RJ45 sockets LED diagnostics Type: Scalance XB008 Order No.: 6GK5008-0BA10-1AB2 6GK5008-0BA10-1AB2	Siemens	+UACJA10	-U301	

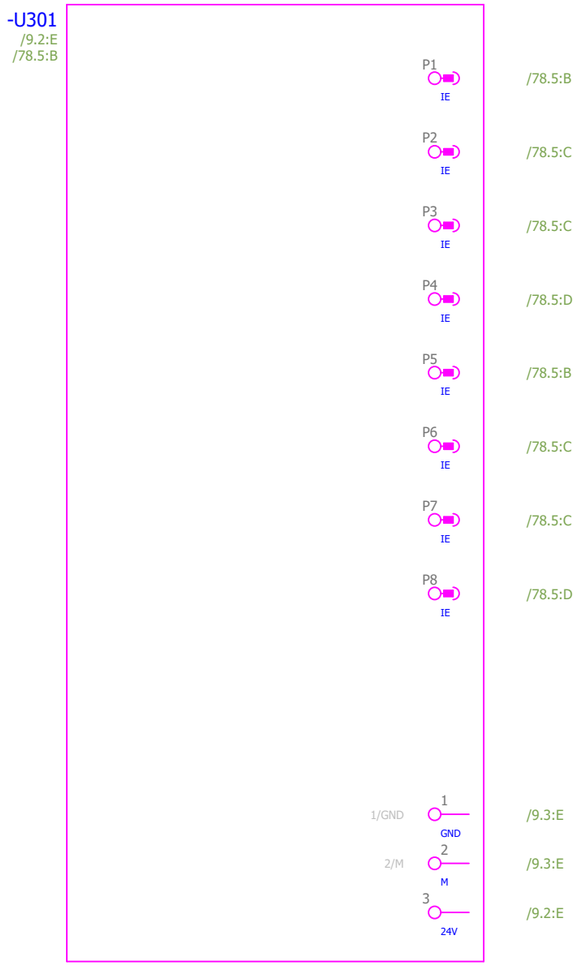

CONFIDENTIAL, ALL RIGHTS RESERVED DIN 34

Format ISO/DIN A3

Approved by Contractor			Reconstruction and Modernisation of HPP Perucica - Phase II	epcg	SINTAKSA A Voith Company Sintaksa - A Voith Company Ulica Domovinskog rata 104C, 21 000 Split, Hrvatska	Unit KA1 control cubicle circuit diagrams SWITCH 2	DRAWING No.: PERU-01-19-170-31-001	REV No.: 02	= UACJA10GH100 + UACJA10
Approved by Designer	Grga Kolić	15.6.2026.							
Checked by	Antonio Aleksić	15.6.2026.					Designer No.:	SALES No.:	PAGE 108
Drawn by	Tamara Trogrlić	15.6.2026.	PROJECT NAME	EMPLOYER	DESIGNER				PAGE 108 / 156

Qty. (pcs)	Equipment technical description	Manufacturer	Location (= / +)	Designation (-)	Symbol Position in shematics (Page, column)
1	Power supply: 24 Vdc Discrete raise/lower: Speed Discrete raise/lower: Voltage Discrete alarm inputs: 4; discrete outputs: 2 Measuring inputs: 400 Vac Type: SPM-D2-10 8440-2164	Woodward	+UACJA10	-F25G	

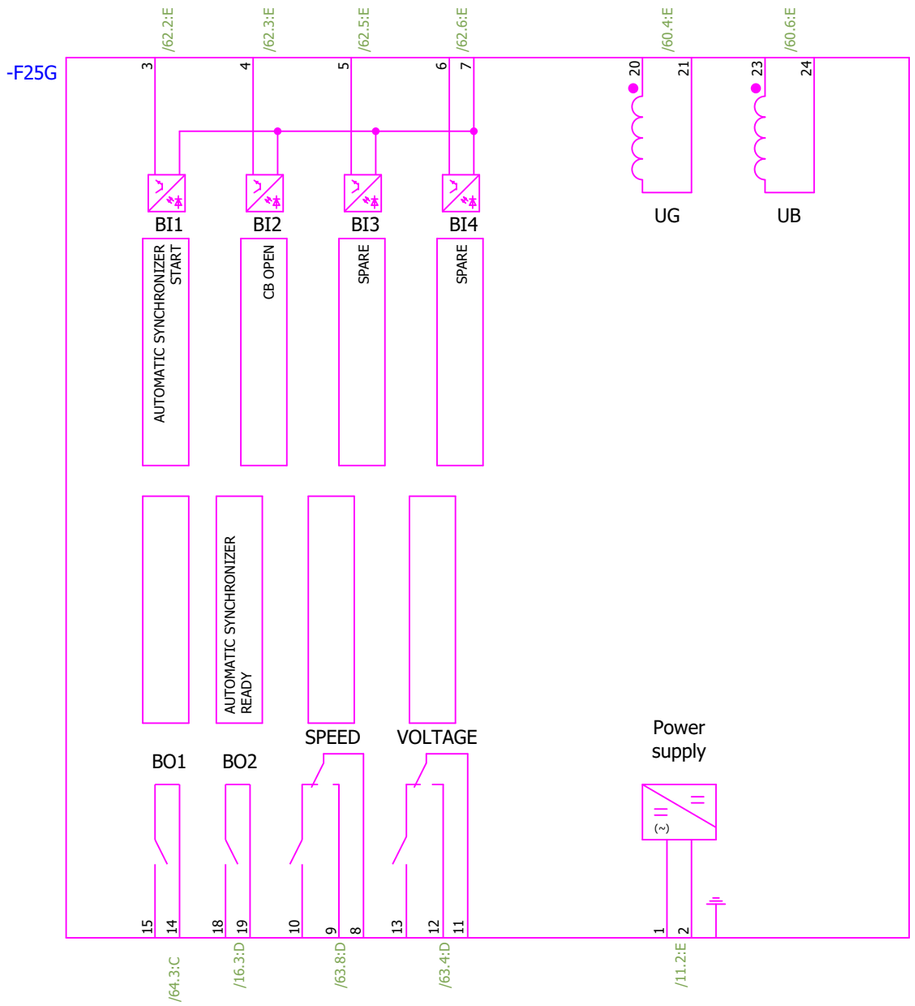

CONFIDENTIAL, ALL RIGHTS RESERVED DIN 34

Format ISO/DIN A3

108

110

Approved by Contractor			Reconstruction and Modernisation of HPP Perucica - Phase II	epcg	SINTAKSA A Voith Company Sintaksa - A Voith Company Ulica Domovinskog rata 104C, 21 000 Split, Hrvatska	Unit KA1 control cubicle circuit diagrams	DRAWING No.: PERU-01-19-170-31-001	REV No.: 02	= UACJA10GH100
Approved by Designer	Grga Kolić	15.6.2026.							+ UACJA10
Checked by	Antonio Aleksić	15.6.2026.				AUTOMATIC SYNCHRONIZER	Designer No.:	SALES No.:	PAGE 109
Drawn by	Tamara Trogrlić	15.6.2026.	PROJECT NAME	EMPLOYER	DESIGNER				PAGE 109 / 156

Qty. (pcs)	Equipment technical description	Manufacturer	Location (= / +)	Designation (-)	Symbol Position in shematics (Page, column)
1	The flexible fault annunciator series BSM-P, programmable BSM-P 59B1611PR000	EPLAN	+UACJA10	-H01	

-H01

EES
BSM-P 59B1611PR000

CONFIDENTIAL, ALL RIGHTS RESERVED DIN 34

Format ISO/DIN A3

Approved by Contractor			Reconstruction and Modernisation of HPP Perucica - Phase II	epcg	SINTAKSA A Voith Company Sintaksa - A Voith Company Ulica Domovinskog rata 104C, 21 000 Split, Hrvatska	Unit KA1 control cubicle circuit diagrams	DRAWING No.:	REV No.:	= UACJA10GH100
Approved by Designer	Grga Kolić	15.6.2026.					PERU-01-19-170-31-001	02	+ UACJA10
Checked by	Antonio Aleksić	15.6.2026.				PANEL MOUNTED FAULT ANNUCIATOR	Designer No.:	SALES No.:	PAGE 110
Drawn by	Tamara Trogrlić	15.6.2026.	PROJECT NAME	EMPLOYER	DESIGNER				PAGE 110 / 156

Qty. (pcs)	Equipment technical description	Manufacturer	Location (+)	Designation (-)	Symbol Position in shematics (Page, column)
	Contact module with 1 contact element, 1 NO Contact module with 1 contact element, 1 NO, screw terminal, for front plate mounting Order No.: 3SU1400-1AA10-1BA0 ILLUMINATED PUSHBUTTON, RED Type: 3SU1051-0AB20-0AA0 Illuminated pushbutton, 22 mm, round, metal, shiny, red, pushbutton, flat, momentary contact type HOLDER Type: 3SU1550-0AA10-0AA0 Holder for 3 modules, universal, plastic/metal LED MODULE, RED Type: 3SU1401-1BB20-1AA0 LED MODULE WITH INTEGRATED LED 24V AC/DC, RED, SCREW TERMINAL, FOR FRONT PLATE MOUNTING SIRIUS ACT Label holder Type: 3SU1900-0AP10-0AA0 Label holder, 22mm, frame rectangular at the bottom, black, for labeling plate 17.5 mm x 27 mm, for gluing	Siemens			
1			+UACJA10	-S112	/17.8:D /42.4:D
	Heater Rated power: 100W Input voltage: 110-250V Order No.: HT100	Alfa Electric			
			+UACJA10	-R101	/5.5:F
2			+UACJA10	-R102	/5.6:F
	LED system light Slim enclosure LED lamp, 9 W, 100 to 230V, 50H, 538×23×36 mm Order No.: LL49W-100-230V	ALFA ELECTRIC			
			+UACJA10	-E101	/5.3:F
2			+UACJA10	-E102	/5.4:F

CONFIDENTIAL, ALL RIGHTS RESERVED DIN 34

Format ISO/DIN A3

Approved by Contractor			Reconstruction and Modernisation of HPP Perucica - Phase II	epcg	SINTAKSA A Voith Company Sintaksa - A Voith Company Ulica Domovinskog rata 104C, 21 000 Split, Hrvatska	Unit KA1 control cubicle circuit diagrams	DRAWING No.: PERU-01-19-170-31-001	REV No.: 02	= UACJA10GH100
Approved by Designer	Grga Kolić	15.6.2026.							+ UACJA10
Checked by	Antonio Aleksić	15.6.2026.				Device tag List	Designer No.:	SALES No.:	PAGE 111
Drawn by	Tamara Trogrlić	15.6.2026.	PROJECT NAME	EMPLOYER	DESIGNER				PAGE 111 / 156

Qty. (pcs)	Equipment technical description	Manufacturer	Location (+)	Designation (-)	Symbol Position in shematics (Page, column)
	Thermostat NO contact 0...+60°C Type: THV02 Order No.: THV02	Alfa Electric			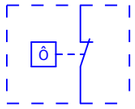
1			+UACJA10	-B103	/5.6:C
	Diode Circuit configuration: Two diodes doubler circuit, two diodes common cathode, two diodes common anode, single diode Vf - Forward Voltage: 1.35 V Vr - Reverse Voltage: 800 V Type: DD100KB80 Order No.: 197-DD100KB80	SanRex			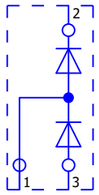
			+UACJA10	-V1	/6.1:B
2			+UACJA10	-V2	/6.2:B
	Electronic hygrostat Hygrostat, Rated Voltage 120-240 V AC, Rated Current 10-5A 10-90 %RF Type: IGR35F Order No.: IGR35F				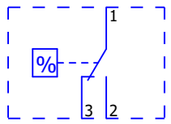
1			+UACJA10	-B102	/5.5:E

CONFIDENTIAL, ALL RIGHTS RESERVED DIN 34

Format ISO/DIN A3

111

113

Approved by Contractor			Reconstruction and Modernisation of HPP Perucica - Phase II	epcg	SINTAKSA A Voith Company Sintaksa - A Voith Company Ulica Domovinskog rata 104C, 21 000 Split, Hrvatska	Unit KA1 control cubicle circuit diagrams Device tag List	DRAWING No.: PERU-01-19-170-31-001	REV No.: 02	= UACJA10GH100
Approved by Designer	Grga Kolić	15.6.2026.							+ UACJA10
Checked by	Antonio Aleksić	15.6.2026.					Designer No.:	SALES No.:	PAGE 112
Drawn by	Tamara Trogrlić	15.6.2026.	PROJECT NAME	EMPLOYER	DESIGNER				PAGE 112 / 156

Qty. (pcs)	Equipment technical description	Manufacturer	Location (+)	Designation (-)	Symbol Position in shematics (Page, column)	
1	Speed monitoring relay MONITOR/FR-1 /110-240VAC/DC Nominal voltage: 110...240VAC (50...60Hz)/27Hz (tip. 24VDC) 2 relay outputs, 2 transistor outputs Analog output: 0/4...20mA Impuls inputs: pnp/npn, NAMUR (24V) Input frequency (max): 5kHz Setting range: 1...60000 imp/min (0.1...1000Hz) Type: DD2503 Order No.: DD2503	ifm electronic	+UACJA10	-B111	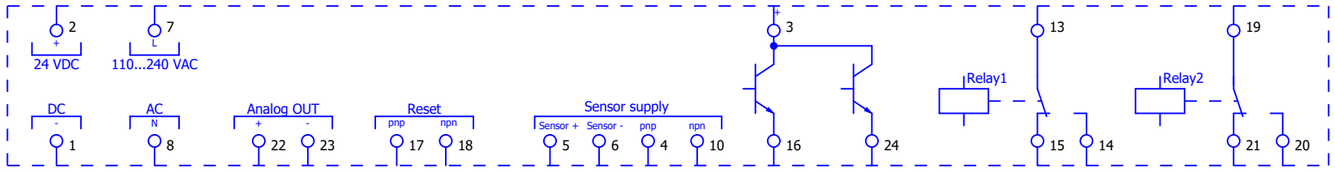	/9.5:E /48.7:F
1	Synchronisation meters for manual or semiautomatic synchronisation Scale: 360° Power supply from bus bar or generator Displayed value equal to voltage input Order No.: SQ0214-L-400V-R3-N-N-S-A-0	ISKRA	+UACJA10	-P411	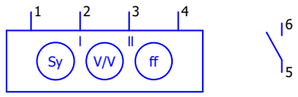	/61.4:E /64.2:C
1	Analog panel meter Scale: 0-500 V, 48x48mm Direct measurement Order No.: EA16N E61500000A8	LUMEL	+UACJA10	-P110		/76.6:D
1	Analog panel meter Scale: 0-200% Input signal: 4-20mA Order No.: MA19LN A900X000008	LUMEL	+UACJA10	-P1		/46.5:C
	Auxiliary relay PLC-INTERFACE, consisting of PLC-BSC.../21 basic terminal block with screw connection and plug-in miniature relay with power contact, 1 C/O, input voltage 24 V DC for mounting on DIN rail NS 35/7.5 Order No.: 2966171	Phoenix Contact	+UACJA10	-1K12	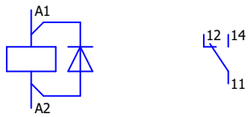	/20.4:D /20.4:E
			+UACJA10	-1K13		/20.5:D /20.5:E
			+UACJA10	-1K14		/20.6:D /20.6:E

CONFIDENTIAL, ALL RIGHTS RESERVED DIN 34

Format ISO/DIN A3

Approved by Contractor			Reconstruction and Modernisation of HPP Perucica - Phase II	epcg	SINTAKSA A Voith Company Sintaksa - A Voith Company Ulica Domovinskog rata 104C, 21 000 Split, Hrvatska	Unit KA1 control cubicle circuit diagrams Device tag List	DRAWING No.: PERU-01-19-170-31-001
Approved by Designer	Grga Kolić	15.6.2026.					REV No.: 02
Checked by	Antonio Aleksić	15.6.2026.					Designer No.:
Drawn by	Tamara Trogrlić	15.6.2026.	PROJECT NAME	EMPLOYER	DESIGNER		SALES No.:

= UACJA10GH100
+ UACJA10
PAGE 113
PAGE 113 / 156

Qty. (pcs)	Equipment technical description	Manufacturer	Location (+)	Designation (-)	Symbol Position in shematics (Page, column)	
	Auxiliary relay PLC-INTERFACE, consisting of PLC-BSC.../21 basic terminal block with screw connection and plug-in miniature relay with power contact, 1 C/O, input voltage 24 V DC for mounting on DIN rail NS 35/7.5 Order No.: 2966171	Phoenix Contact			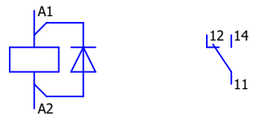	
			+UACJA10	-1K15	/20.7:D	/20.7:E
			+UACJA10	-1K16	/20.8:D	/20.8:E
			+UACJA10	-1K21	/21.1:D	/21.1:E
			+UACJA10	-1K22	/21.2:D	/21.2:E
			+UACJA10	-1K23	/21.3:D	/21.3:E
			+UACJA10	-1K24	/21.4:D	/21.4:E
			+UACJA10	-1K32	/22.2:D	/22.2:E
			+UACJA10	-1K33	/22.3:D	/22.3:E
			+UACJA10	-1K34	/22.4:D	/22.4:E
			+UACJA10	-1K35	/22.5:D	/22.5:E
			+UACJA10	-1K36	/22.6:D	/22.6:E
			+UACJA10	-1K37	/22.7:D	/22.7:E
			+UACJA10	-1K38	/22.8:D	/22.8:E
			+UACJA10	-1K41	/23.1:D	/23.1:E
			+UACJA10	-1K42	/23.2:D	/23.2:E
			+UACJA10	-1K43	/23.3:D	/23.3:E
			+UACJA10	-1K44	/23.4:D	/23.4:E
			+UACJA10	-1K47	/23.7:D	/23.7:E
			+UACJA10	-1K48	/23.8:D	/23.8:E
			+UACJA10	-1K51	/24.1:D	/24.1:E
			+UACJA10	-1K52	/24.2:D	/24.2:E
			+UACJA10	-1K53	/24.3:D	/24.3:E
			+UACJA10	-1K55	/24.5:D	/24.5:E
			+UACJA10	-1K56	/24.6:D	/24.6:E
			+UACJA10	-1K57	/24.7:D	/24.7:E
			+UACJA10	-1K75	/26.5:D	/26.5:E
			+UACJA10	-1K77	/26.7:D	/26.7:E
			+UACJA10	-1K78	/26.8:D	/26.8:E
			+UACJA10	-1K81	/27.1:D	/27.1:E
			+UACJA10	-1K82	/27.2:D	/27.2:E
			+UACJA10	-1K83	/27.3:D	/27.3:E
			+UACJA10	-1K84	/27.4:D	/27.4:E

CONFIDENTIAL, ALL RIGHTS RESERVED DIN 34

Format ISO/DIN A3

Approved by Contractor			Reconstruction and Modernisation of HPP Perucica - Phase II	epcg	SINTAKSA A Voith Company Sintaksa - A Voith Company Ulica Domovinskog rata 104C, 21 000 Split, Hrvatska	Unit KA1 control cubicle circuit diagrams Device tag List	DRAWING No.: PERU-01-19-170-31-001	REV No.: 02	= UACJA10GH100
Approved by Designer	Grga Kolić	15.6.2026.							+ UACJA10
Checked by	Antonio Aleksić	15.6.2026.					Designer No.:	SALES No.:	PAGE 114
Drawn by	Tamara Trogrlić	15.6.2026.	PROJECT NAME	EMPLOYER	DESIGNER				PAGE 114 / 156

Qty. (pcs)	Equipment technical description	Manufacturer	Location (+)	Designation (-)	Symbol Position in shematics (Page, column)	
	Auxiliary relay PLC-INTERFACE, consisting of PLC-BSC.../21 basic terminal block with screw connection and plug-in miniature relay with power contact, 1 C/O, input voltage 24 V DC for mounting on DIN rail NS 35/7.5 Order No.: 2966171	Phoenix Contact			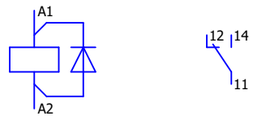	
			+UACJA10	-1K85	/27.5:D	/27.5:E
			+UACJA10	-1K86	/27.6:D	/27.6:E
			+UACJA10	-1K87	/27.7:D	/27.7:E
			+UACJA10	-1K88	/27.8:D	/27.8:E
			+UACJA10	-1K91	/28.1:D	/28.1:E
			+UACJA10	-1K92	/28.2:D	/28.2:E
			+UACJA10	-1K93	/28.3:D	/28.3:E
			+UACJA10	-1K94	/28.4:D	/28.4:E
			+UACJA10	-1K95	/28.5:D	/28.5:E
			+UACJA10	-1K101	/29.1:D	/29.1:E
			+UACJA10	-1K102	/29.2:D	/29.2:E
			+UACJA10	-1K103	/29.3:D	/29.3:E
			+UACJA10	-1K104	/29.4:D	/29.4:E
			+UACJA10	-1K105	/29.5:D	/29.5:E
			+UACJA10	-1K106	/29.6:D	/29.6:E
			+UACJA10	-1K107	/29.7:D	/29.7:E
			+UACJA10	-1K108	/29.8:D	/29.8:E
			+UACJA10	-1K111	/30.1:D	/30.1:E
			+UACJA10	-1K112	/30.2:D	/30.2:E
			+UACJA10	-1K113	/30.3:D	/30.3:E
			+UACJA10	-1K114	/30.4:D	/30.4:E
			+UACJA10	-1K115	/30.5:D	/30.5:E
			+UACJA10	-1K116	/30.6:D	/30.6:E
			+UACJA10	-1K117	/30.7:D	/30.7:E
			+UACJA10	-1K118	/30.8:D	/30.8:E
			+UACJA10	-1K121	/31.1:D	/31.1:E
			+UACJA10	-1K122	/31.2:D	/31.2:E
			+UACJA10	-1K123	/31.3:D	/31.3:E
			+UACJA10	-1K124	/31.4:D	/31.4:E
			+UACJA10	-1K125	/31.5:D	/31.5:E
			+UACJA10	-1K126	/31.6:D	/31.6:E
			+UACJA10	-1K127	/31.7:D	/31.7:E

CONFIDENTIAL, ALL RIGHTS RESERVED DIN 34

Format ISO/DIN A3

Approved by Contractor			Reconstruction and Modernisation of HPP Perucica - Phase II	epcg	SINTAKSA A Voith Company Sintaksa - A Voith Company Ulica Domovinskog rata 104C, 21 000 Split, Hrvatska	Unit KA1 control cubicle circuit diagrams Device tag List	DRAWING No.: PERU-01-19-170-31-001	REV No.: 02	= UACJA10GH100
Approved by Designer	Grga Kolić	15.6.2026.							+ UACJA10
Checked by	Antonio Aleksić	15.6.2026.					Designer No.:	SALES No.:	PAGE 115
Drawn by	Tamara Trogrlić	15.6.2026.	PROJECT NAME	EMPLOYER	DESIGNER				PAGE 115 / 156

Qty. (pcs)	Equipment technical description	Manufacturer	Location (+)	Designation (-)	Symbol Position in shematics (Page, column)	
	Auxiliary relay PLC-INTERFACE, consisting of PLC-BSC.../21 basic terminal block with screw connection and plug-in miniature relay with power contact, 1 C/O, input voltage 24 V DC for mounting on DIN rail NS 35/7.5 Order No.: 2966171	Phoenix Contact			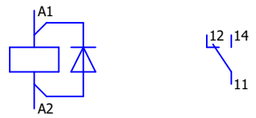	
			+UACJA10	-1K128	/31.8:D	/31.8:E
			+UACJA10	-1K131	/32.1:D	/32.1:E
			+UACJA10	-1K132	/32.2:D	/32.2:E
			+UACJA10	-1K133	/32.3:D	/32.3:E
			+UACJA10	-1K134	/32.4:D	/32.4:E
			+UACJA10	-1K135	/32.5:D	/32.5:E
			+UACJA10	-1K136	/32.6:D	/32.6:E
			+UACJA10	-1K137	/32.7:D	/32.7:E
			+UACJA10	-1K138	/32.8:D	/32.8:E
			+UACJA10	-1K141	/33.1:D	/33.1:E
			+UACJA10	-1K142	/33.2:D	/33.2:E
			+UACJA10	-1K143	/33.3:D	/33.3:E
			+UACJA10	-1K144	/33.4:D	/33.4:E
			+UACJA10	-1K145	/33.5:D	/33.5:E
			+UACJA10	-1K146	/33.6:D	/33.6:E
			+UACJA10	-1K147	/33.7:D	/33.7:E
			+UACJA10	-1K148	/33.8:D	/33.8:E
			+UACJA10	-1K151	/34.1:D	/34.1:E
			+UACJA10	-1K152	/34.2:D	/34.2:E
			+UACJA10	-1K153	/34.3:D	/34.3:E
			+UACJA10	-1K157	/34.7:D	/34.7:E
			+UACJA10	-1K158	/34.8:D	/34.8:E
			+UACJA10	-1K161	/35.1:D	/35.1:E
			+UACJA10	-1K162	/35.2:D	/35.2:E
			+UACJA10	-1K163	/35.3:D	/35.3:E
			+UACJA10	-1K164	/35.4:D	/35.4:E
			+UACJA10	-1K165	/35.5:D	/35.5:E
			+UACJA10	-1K166	/35.6:D	/35.6:E
			+UACJA10	-1K167	/35.7:D	/35.7:E
			+UACJA10	-1K168	/35.8:D	/35.8:E
			+UACJA10	-2K01	/36.1:D	/56.2:C
			+UACJA10	-2K02	/36.2:D	/56.2:C

CONFIDENTIAL, ALL RIGHTS RESERVED DIN 34

Format ISO/DIN A3

Approved by Contractor			Reconstruction and Modernisation of HPP Perucica - Phase II	epcg	SINTAKSA A Voith Company Sintaksa - A Voith Company Ulica Domovinskog rata 104C, 21 000 Split, Hrvatska	Unit KA1 control cubicle circuit diagrams Device tag List	DRAWING No.: PERU-01-19-170-31-001	REV No.: 02	= UACJA10GH100
Approved by Designer	Grga Kolić	15.6.2026.							+ UACJA10
Checked by	Antonio Aleksić	15.6.2026.					Designer No.:	SALES No.:	PAGE 116
Drawn by	Tamara Trogrlić	15.6.2026.	PROJECT NAME	EMPLOYER	DESIGNER				PAGE 116 / 156

Qty. (pcs)	Equipment technical description	Manufacturer	Location (+)	Designation (-)	Symbol Position in shematics (Page, column)	
	Auxiliary relay PLC-INTERFACE, consisting of PLC-BSC.../21 basic terminal block with screw connection and plug-in miniature relay with power contact, 1 C/O, input voltage 24 V DC for mounting on DIN rail NS 35/7.5 Order No.: 2966171	Phoenix Contact			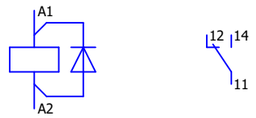	
			+UACJA10	-2K03	/36.3:D	/57.2:A
			+UACJA10	-2K04	/36.4:D	/58.4:B
			+UACJA10	-2K05	/36.5:D	/49.2:B
			+UACJA10	-2K06	/36.6:D	/49.3:B
			+UACJA10	-2K07	/36.7:D	/49.4:B
			+UACJA10	-2K08	/37.6:D	/52.7:B
			+UACJA10	-2K09	/37.7:D	/52.8:B
			+UACJA10	-2K10	/38.2:D	/49.6:B
			+UACJA10	-2K11	/38.5:D	/59.5:B
			+UACJA10	-2K12	/38.6:D	/62.2:B
			+UACJA10	-2K13	/39.1:D	/64.5:B
			+UACJA10	-2K14	/39.2:D	/64.6:B
			+UACJA10	-2K15	/39.4:D	/65.2:B
			+UACJA10	-2K16	/39.5:D	/65.3:B
			+UACJA10	-2K17	/39.6:D	/65.4:B
			+UACJA10	-2K18	/39.7:D	/65.5:B
			+UACJA10	-2K19	/39.8:D	/67.2:B
			+UACJA10	-2K20	/40.1:D	/67.3:B
			+UACJA10	-2K21	/40.2:D	/67.4:B
			+UACJA10	-2K22	/40.3:D	/67.5:B
			+UACJA10	-2K23	/40.5:D	/68.6:C
			+UACJA10	-2K24	/40.6:D	
			+UACJA10	-2K25	/40.7:D	
			+UACJA10	-2K26	/40.8:D	
			+UACJA10	-2K27	/41.1:D	
			+UACJA10	-2K28	/41.2:D	
			+UACJA10	-2K29	/41.3:D	
127			+UACJA10	-2K30	/41.4:D	

CONFIDENTIAL, ALL RIGHTS RESERVED DIN 34

Format ISO/DIN A3

Approved by Contractor			Reconstruction and Modernisation of HPP Perucica - Phase II	epcg	SINTAKSA A Voith Company Sintaksa - A Voith Company Ulica Domovinskog rata 104C, 21 000 Split, Hrvatska	Unit KA1 control cubicle circuit diagrams Device tag List	DRAWING No.: PERU-01-19-170-31-001	REV No.: 02	= UACJA10GH100
Approved by Designer	Grga Kolić	15.6.2026.							+ UACJA10
Checked by	Antonio Aleksić	15.6.2026.					Designer No.:	SALES No.:	PAGE 117
Drawn by	Tamara Trogrlić	15.6.2026.	PROJECT NAME	EMPLOYER	DESIGNER				PAGE 117 / 156

Qty. (pcs)	Equipment technical description	Manufacturer	Location (+)	Designation (-)	Symbol Position in shematics (Page, column)		
	Interface relay 24VDC, 2CO Auxiliary relay Nominal coil voltage: 24VDC 2 CO Order No.: 2967060	Phoenix Contact			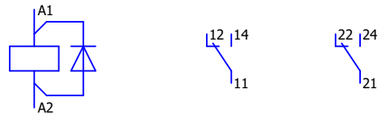		
			+UACJA10	-1K11	/20.3:D	/20.3:E	/71.2:C
			+UACJA10	-1K25	/21.5:D	/21.5:E	/71.2:C
			+UACJA10	-1K26	/21.6:D	/21.6:E	/71.3:C
			+UACJA10	-1K27	/21.7:D	/21.7:E	/71.4:C
			+UACJA10	-1K28	/21.8:D	/21.8:E	/71.5:C
			+UACJA10	-1K31	/22.1:D	/22.1:E	/71.6:C
			+UACJA10	-1K45	/23.5:D	/23.5:E	/71.6:C
			+UACJA10	-1K46	/23.6:D	/23.6:E	/71.7:C
			+UACJA10	-1K54	/24.4:D	/24.4:E	/71.8:C
			+UACJA10	-1K76	/26.6:D	/26.6:E	
			+UACJA10	-1K96	/28.6:D	/28.6:E	
			+UACJA10	-1K97	/28.7:D	/28.7:E	
			+UACJA10	-1K98	/28.8:D	/28.8:E	/69.5:C
			+UACJA10	-1K154	/34.4:D	/34.4:E	/71.2:D
			+UACJA10	-1K155	/34.5:D	/34.5:E	/71.2:D
16			+UACJA10	-1K156	/34.6:D	/34.6:E	/71.3:D
	Auxiliary relay Input voltage 230 V AC/220 V DC Order No.: 2966207	Phoenix Contact			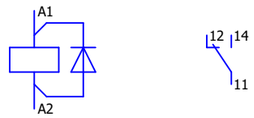		
			+UACJA10	-1K62	/25.2:D	/25.2:E	
			+UACJA10	-1K63	/25.3:D	/25.3:E	
			+UACJA10	-1K66	/25.6:D	/25.6:E	
			+UACJA10	-1K67	/25.7:D	/25.7:E	
			+UACJA10	-1K68	/25.8:D	/25.8:E	
			+UACJA10	-1K71	/26.1:D	/26.1:E	
			+UACJA10	-1K72	/26.2:D	/26.2:E	
			+UACJA10	-1K73	/26.3:D	/26.3:E	
9			+UACJA10	-1K74	/26.4:D	/26.4:E	

CONFIDENTIAL, ALL RIGHTS RESERVED DIN 34

Format ISO/DIN A3

Approved by Contractor			Reconstruction and Modernisation of HPP Perucica - Phase II	epcg	SINTAKSA A Voith Company Sintaksa - A Voith Company Ulica Domovinskog rata 104C, 21 000 Split, Hrvatska	Unit KA1 control cubicle circuit diagrams Device tag List	DRAWING No.: PERU-01-19-170-31-001	REV No.: 02	= UACJA10GH100 + UACJA10
Approved by Designer	Grga Kolić	15.6.2026.					Designer No.:	SALES No.:	PAGE 118
Checked by	Antonio Aleksić	15.6.2026.							PAGE 118 / 156
Drawn by	Tamara Trogrlić	15.6.2026.	PROJECT NAME	EMPLOYER	DESIGNER				

Qty. (pcs)	Equipment technical description	Manufacturer	Location (+)	Designation (-)	Symbol Position in shematics (Page, column)		
4	Interface relay 230VAC/220VDC, 2CO Auxiliary relay Nominal coil voltage: 230VAC/220VDC 2 C/O Order No.: 2967099	Phoenix Contact			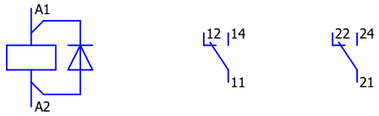		
			+UACJA10	-1K58	/24.8:D	/24.8:E	/53.2:C
			+UACJA10	-1K61	/25.1:D	/25.1:E	/53.3:C
			+UACJA10	-1K64	/25.4:D	/25.4:E	/53.4:C
			+UACJA10	-1K65	/25.5:D	/25.5:E	/53.5:C
2	Blue e+ Fan-and-filter units SK Blue e+ fan-and-filter unit, 218/191 m³/h, 230 V, 1~, 50 Hz/60 Hz, WHD 255 x 255 x 129 mm, RAL 7035 Order No.: 3240700	Rittal			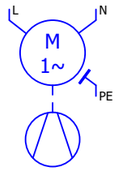		
			+UACJA10	-M101	/5.7:F		
			+UACJA10	-M102	/5.8:F		
1	Rated voltage: 250V, 50Hz Rated current: 16A Order No.: A9A15310	Schneider Electric			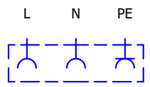		
			+UACJA10	-X101	/5.2:F		
2	2-pole DC Switch Disconnector 2P DC Switch Disconnector Nominal current: 20 A Insulation voltage: 1000 VDC Order No.: A9N61690	Schneider Electric			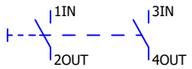		
			+UACJA10	-SV1	/6.1:D		
			+UACJA10	-SV2	/6.2:D		

CONFIDENTIAL, ALL RIGHTS RESERVED DIN 34

Format ISO/DIN A3

Approved by Contractor			Reconstruction and Modernisation of HPP Perucica - Phase II	epcg	SINTAKSA A Voith Company Sintaksa - A Voith Company Ulica Domovinskog rata 104C, 21 000 Split, Hrvatska	Unit KA1 control cubicle circuit diagrams Device tag List	DRAWING No.: PERU-01-19-170-31-001	REV No.: 02	= UACJA10GH100 + UACJA10
Approved by Designer	Grga Kolić	15.6.2026.					Designer No.:	SALES No.:	PAGE 119
Checked by	Antonio Aleksić	15.6.2026.							PAGE 119 / 156
Drawn by	Tamara Trogrlić	15.6.2026.	PROJECT NAME	EMPLOYER	DESIGNER				

Qty. (pcs)	Equipment technical description	Manufacturer	Location (+)	Designation (-)	Symbol Position in shematics (Page, column)
	Distribution block Linergy DS - screw distribution block 1P - 125A - 10 holes Type: Linergy DS Order No.: LGY112510	Schneider Electric			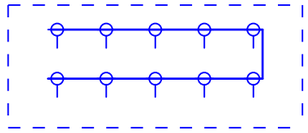
			+UACJA10	-U50	/6.1:A
			+UACJA10	-U51	/6.1:B
3			+UACJA10	-U52	/8.1:F
	Interface plug-in relay - Zelio RXG Nominal coil voltage: 24VDC Nominal contact current: 5A 2 CO, with LED, lockable test button Base: RGZE1S48M Protection diode: RXM040W Order No.: RXG22BD Protection module Harmony 6...230V DC Type: SE.RZM040W Harmony, Protection module, diode, for RSZ, 6…230 V DC Socket Type: RGZE1S48M Socket with clamp, 5 A, For RXG2 relays 2 C/O, screw connectors	Schneider Electric			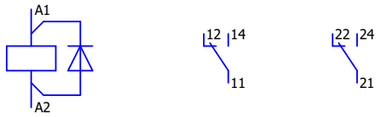
			+UACJA10	-2K201	/39.3:D /63.2:B /63.6:B
			+UACJA10	-2K202	/41.5:D
			+UACJA10	-2K203	/41.6:D
			+UACJA10	-K201	/15.2:E /18.5:D /69.2:C
			+UACJA10	-K202	/15.3:E /18.6:D /69.2:C
			+UACJA10	-K203	/15.4:E /18.8:D /66.4:B
			+UACJA10	-K204	/15.5:E /19.6:D /69.2:C
			+UACJA10	-K205	/15.6:E /19.7:D /69.3:C
			+UACJA10	-K206	/15.7:E /19.8:D /69.4:C
			+UACJA10	-K207	/53.2:E /62.3:C /66.6:B
			+UACJA10	-K208	/53.3:E /65.6:B /68.5:C
			+UACJA10	-K209	/53.4:E /62.4:C

CONFIDENTIAL, ALL RIGHTS RESERVED DIN 34

Format ISO/DIN A3

Approved by Contractor			Reconstruction and Modernisation of HPP Perucica - Phase II	epcg	SINTAKSA A Voith Company Sintaksa - A Voith Company Ulica Domovinskog rata 104Ç, 21 000 Split, Hrvatska	Unit KA1 control cubicle circuit diagrams Device tag List	DRAWING No.: PERU-01-19-170-31-001	REV No.: 02	= UACJA10GH100
Approved by Designer	Grga Kolić	15.6.2026.						SALES No.:	+ UACJA10
Checked by	Antonio Aleksić	15.6.2026.					Designer No.:		PAGE 120
Drawn by	Tamara Trogrlić	15.6.2026.	PROJECT NAME	EMPLOYER	DESIGNER				PAGE 120 / 156

Qty. (pcs)	Equipment technical description	Manufacturer	Location (+)	Designation (-)	Symbol Position in shematics (Page, column)
	Interface plug-in relay - Zelio RXG Nominal coil voltage: 24VDC Nominal contact current: 5A 2 CO, with LED, lockable test button Base: RGZE1S48M Protection diode: RXM040W Order No.: RXG22BD Protection module Harmony 6...230V DC Type: SE.RZM040W Harmony, Protection module, diode, for RSZ, 6…230 V DC Socket Type: RGZE1S48M Socket with clamp, 5 A, For RXG2 relays 2 C/O, screw connectors	Schneider Electric			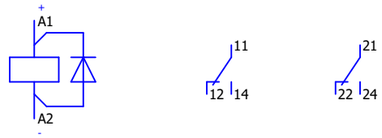
13			+UACJA10	-K210	/53.5:E
	Miniature plug-in relay - Zelio RXM 6 A 4 CO With LED With lockable test button 24 V DC Order No.: RXM4AB2BD Socket RXZ Type: RXZE2S114M Separate contact For RXM2/RXM4 relays 4 C/O, screw connectors 10 A, 250V AC Protection module Harmony 6...230V DC Type: SE.RZM040W Harmony, Protection module, diode, for RSZ, 6…230 V DC	Schneider Electric			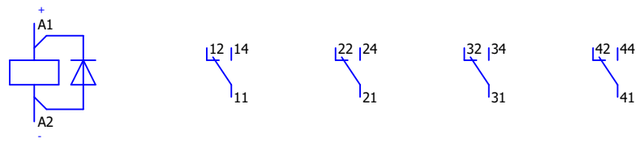
			+UACJA10	-K101	/59.2:E /16.4:D /64.2:B
			+UACJA10	-K102	/59.3:E /16.6:D /64.3:B
3			+UACJA10	-K103	/59.4:E /16.5:D /64.4:B /64.2:D /64.4:D
	Door contact Door contact, 1NO+1NC Order No.: XCKN2110G11	Schneider Electric			
			+UACJA10	-S101	/5.3:E
2			+UACJA10	-S102	/5.4:E

CONFIDENTIAL, ALL RIGHTS RESERVED DIN 34

Format ISO/DIN A3

Approved by Contractor			Reconstruction and Modernisation of HPP Perucica - Phase II	epcg	SINTAKSA A Voith Company Sintaksa - A Voith Company Ulica Domovinskog rata 104C, 21 000 Split, Hrvatska	Unit KA1 control cubicle circuit diagrams	DRAWING No.: PERU-01-19-170-31-001	REV No.: 02	= UACJA10GH100
Approved by Designer	Grga Kolić	15.6.2026.							+ UACJA10
Checked by	Antonio Aleksić	15.6.2026.				Device tag List	Designer No.:	SALES No.:	PAGE 121
Drawn by	Tamara Trogrlić	15.6.2026.	PROJECT NAME	EMPLOYER	DESIGNER				PAGE 121 / 156

Qty. (pcs)	Equipment technical description	Manufacturer	Location (+)	Designation (-)	Symbol Position in shematics (Page, column)
1	REV.COMB.,4KW, DC24V REV. COMB., AC3, 4KW/400V DC24V 3-POLE, SZ S00 SCREW TERMINAL ELECTR. AND MECH. INTERLOCK Electrical and mechanical interlocking Type: 3RA2316-8XB30-1BB4 Order No.: 3RA2316-8XB30-1BB4	Siemens	+UACJA10	-K1	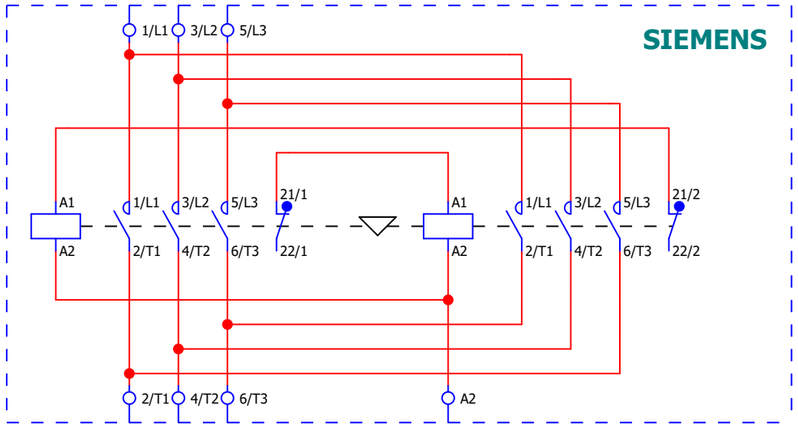 /52.2:B /52.7:C
2	COUPL.CONT.RELAY,3NO+1NC,DC24V,DIODE COUPLING CONTACTOR RELAY, 3NO+1NC, DC 24V, 0.85..1.85*US, W/ INTEGRATED DIODE, SIZE S00, SCREW TERMINAL Order No.: 3RH2131-1VB40	Siemens	+UACJA10	-2K111	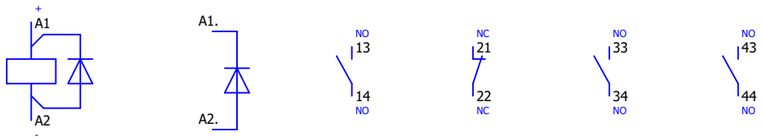 /38.7:D /62.3:B /19.2:D /64.2:D /59.6:B
			+UACJA10	-2K112	/38.8:D /62.4:B /19.3:D /64.4:D /59.7:B
1	SIRIUS contactor relay Contactor relay, 4NO, 24VDC, with integrated diode, size S00, screw terminal Order No.: 3RH2140-1FB40 AUX. SWITCH BLOCK , 3NO+1NC COND. PATHS: 1NO, 1NC, Type: 3RH2911-1GA31 Auxiliary switch block , 3NO+1NC conditional paths: 1NO, 1NC, 1NO, 1NO, for contactor relays size S00, screw terminal DIN EN 50011	Siemens	+UACJA10	-K01	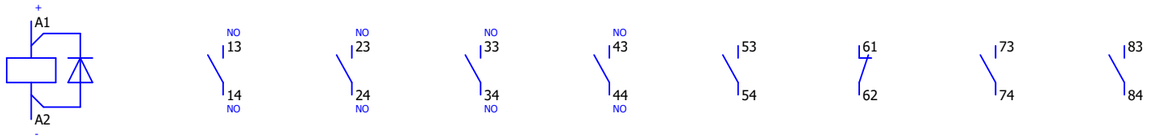 /59.5:E /61.4:D /61.4:D /61.5:D /61.5:D
	SIRIUS contactor relay Contactor relay, 4NO, 24VDC, with integrated diode, size S00, screw terminal Order No.: 3RH2140-1FB40 AUXILIARY SWITCH BLOCK, 4NC Type: 3RH2911-1GA04 Auxiliary switch block 4NC, only with contactor relays 3RH2140 and 3RH2440 combinable, screw terminal DIN EN 50011	Siemens	+UACJA10	-K302	 /57.3:E /16.8:D /66.2:B /57.3:A

CONFIDENTIAL, ALL RIGHTS RESERVED DIN 34

Format ISO/DIN A3

Approved by Contractor			Reconstruction and Modernisation of HPP Perucica - Phase II	epcg	SINTAKSA A Voith Company Sintaksa - A Voith Company Ulica Domovinskog rata 104C, 21 000 Split, Hrvatska	Unit KA1 control cubicle circuit diagrams	DRAWING No.: PERU-01-19-170-31-001	REV No.: 02	= UACJA10GH100
Approved by Designer	Grga Kolić	15.6.2026.							+ UACJA10
Checked by	Antonio Aleksić	15.6.2026.				Device tag List	Designer No.:	SALES No.:	PAGE 122
Drawn by	Tamara Trogrlić	15.6.2026.	PROJECT NAME	EMPLOYER	DESIGNER				PAGE 122 / 156

Qty. (pcs)	Equipment technical description	Manufacturer	Location (+)	Designation (-)	Symbol Position in shematics (Page, column)								
	SIRIUS contactor relay Contactor relay, 4NO, 24VDC, with integrated diode, size S00, screw terminal Order No.: 3RH2140-1FB40 AUXILIARY SWITCH BLOCK, 4NC Type: 3RH2911-1GA04 Auxiliary switch block 4NC, only with contactor relays 3RH2140 and 3RH2440 combinable, screw terminal DIN EN 50011	Siemens			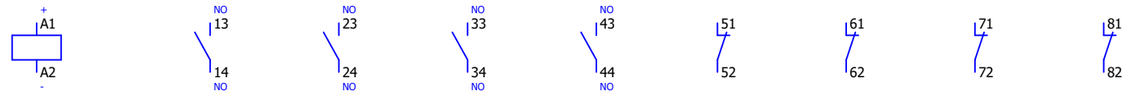							
2			+UACJA10	-K303	/57.4:E					/51.4:B	/51.4:C	/51.4:C	/57.4:A
	COUPL.CONT.RELAY,4NO,DC24V,DIODE COUPLING CONTACTOR RELAY, 4NO, DC 24V, 0.85...1.85*US, W/ INTEGRATED DIODE, SIZE S00, SCREW TERMINAL Order No.: 3RH2140-1VB40	Siemens			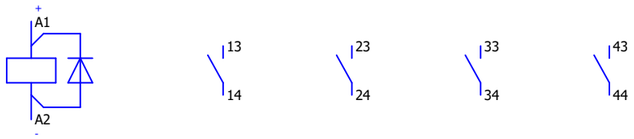								
			+UACJA10	-2K101	/36.8:D	/50.2:B	/50.2:C	/50.2:C					
			+UACJA10	-2K102	/37.1:D	/50.3:B	/50.3:C	/50.3:C					
			+UACJA10	-2K103	/37.2:D	/50.4:B	/50.4:C	/50.4:C					
			+UACJA10	-2K104	/37.3:D	/50.5:B	/50.5:C	/50.5:C					
			+UACJA10	-2K105	/37.4:D	/50.6:B	/50.6:C	/50.6:C					
			+UACJA10	-2K106	/37.5:D	/51.3:B	/51.3:C	/51.3:C					
			+UACJA10	-2K107	/37.8:D	/52.4:B	/52.4:C	/52.4:C					
			+UACJA10	-2K108	/38.1:D	/52.6:B	/52.6:C	/52.6:C					
			+UACJA10	-2K109	/38.3:D	/54.3:B	/54.3:B	/54.3:C					
			+UACJA10	-2K110	/38.4:D								
			+UACJA10	-2K111A	/59.6:E	/60.5:C	/60.5:C	/61.3:C	/61.4:C				
			+UACJA10	-2K112A	/59.7:E	/60.6:C	/60.6:C	/61.4:C	/61.4:C				
			+UACJA10	-2K113	/41.7:D								
14			+UACJA10	-2K114	/41.8:D								

CONFIDENTIAL, ALL RIGHTS RESERVED DIN 34

Format ISO/DIN A3

Approved by Contractor			Reconstruction and Modernisation of HPP Perucica - Phase II	epcg	SINTAKSA A Voith Company Sintaksa - A Voith Company Ulica Domovinskog rata 104C, 21 000 Split, Hrvatska	Unit KA1 control cubicle circuit diagrams	DRAWING No.: PERU-01-19-170-31-001	REV No.: 02	= UACJA10GH100
Approved by Designer	Grga Kolić	15.6.2026.							+ UACJA10
Checked by	Antonio Aleksić	15.6.2026.				Device tag List	Designer No.:	SALES No.:	PAGE 123
Drawn by	Tamara Trogrlić	15.6.2026.	PROJECT NAME	EMPLOYER	DESIGNER				PAGE 123 / 156

Qty. (pcs)	Equipment technical description	Manufacturer	Location (+)	Designation (-)	Symbol Position in shematics (Page, column)
1	SIRIUS SAFETY RELAY STD RELAYS 3NO+1NC SIRIUS safety relay Basic unit Standard series Relay enabling circuits 3 NO contacts plus Relay signaling circuit 1 NC contact Us = 24 V AC/DC screw terminal Type: 3SK1111-1AB30 Order No.: 3SK1111-1AB30	Siemens	+UACJA10	-K301	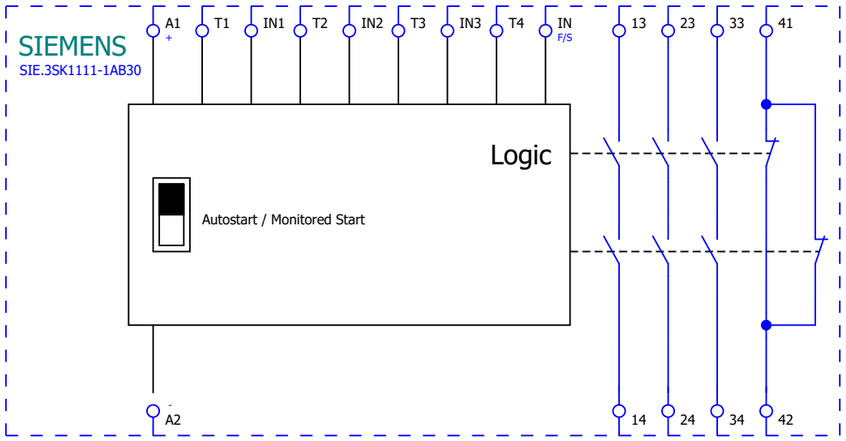 /57.2:C /57.4:E
1	ILLUM. MUSHROOM PUSHBUTTON, 40MM, RED Illuminated mushroom pushbutton, 22 mm, round, metal, shiny, red, 40 mm, latching, Pull-to-unlatch mechanism Order No.: 3SU1051-1BA20-0AA0 LED MODULE, RED Type: 3SU1401-1BB20-1AA0 LED MODULE WITH INTEGRATED LED 24V AC/DC, RED, SCREW TERMINAL, FOR FRONT PLATE MOUNTING PROTECTIVE COLLAR Type: 3SU1900-0DY30-0AA0 PROTECTIVE COLLAR FOR EM. STOP MUSHROOM PUSHBUTTON, WITHOUT OR WITH RONIS LOCK, YELLOW, PLASTIC HOLDER, CONTACT MODULE 1NC,1NC Type: 3SU1550-1AA10-1PA0 Holder for 3 modules, metal, 1 NC, 1 NC, screw terminal	Siemens	+UACJA10	-S301	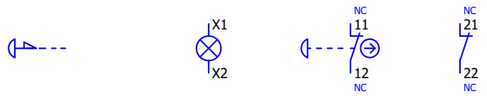 /43.8:D /16.7:D /56.1:B

CONFIDENTIAL, ALL RIGHTS RESERVED DIN 34

Format ISO/DIN A3

Approved by Contractor			Reconstruction and Modernisation of HPP Perucica - Phase II	epcg	SINTAKSA A Voith Company Sintaksa - A Voith Company Ulica Domovinskog rata 104C, 21 000 Split, Hrvatska	Unit KA1 control cubicle circuit diagrams Device tag List	DRAWING No.: PERU-01-19-170-31-001	REV No.: 02	= UACJA10GH100 + UACJA10
Approved by Designer	Grga Kolić	15.6.2026.							
Checked by	Antonio Aleksić	15.6.2026.					Designer No.:	SALES No.:	PAGE 124
Drawn by	Tamara Trogrlić	15.6.2026.	PROJECT NAME	EMPLOYER	DESIGNER				PAGE 124 / 156

Qty. (pcs)	Equipment technical description	Manufacturer	Location (+)	Designation (-)	Symbol Position in shematics (Page, column)
	SELECTOR SWITCH, I>O<II, RED Selector switch, illuminable, 22 mm, round, metal, shiny, red, selector switch, short, 3 switch positions I>O<II, momentary contact type, actuating angle 2x45°, 10:30h/12h/13:30h Order No.: 3SU1052-2BM20-0AA0 Contact module with 1 contact element, 1 NO Type: 3SU1400-1AA10-1BA0 Contact module with 1 contact element, 1 NO, screw terminal, for front plate mounting Contact module with 1 contact element, 1 NO Type: 3SU1400-1AA10-1BA0 Contact module with 1 contact element, 1 NO, screw terminal, for front plate mounting HOLDER Type: 3SU1550-0AA10-0AA0 Holder for 3 modules, universal, plastic/metal SIRIUS ACT Label holder Type: 3SU1900-0AP10-0AA0 Label holder, 22mm, frame rectangular at the bottom, black, for labeling plate 17.5 mm x 27 mm, for gluing	Siemens			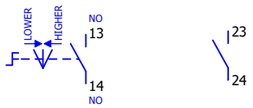
1			+UACJA10	-S221	/63.6:D /63.7:D
	SELECTOR SWITCH, I>O<II, BLUE Selector switch, illuminable, 22 mm, round, metal, shiny, blue, selector switch, short, 3 switch positions I>O<II, momentary contact type, actuating angle 2x45°, 10:30h/12h/13:30h Order No.: 3SU1052-2BM50-0AA0 Contact module with 1 contact element, 1 NO Type: 3SU1400-1AA10-1BA0 Contact module with 1 contact element, 1 NO, screw terminal, for front plate mounting Contact module with 1 contact element, 1 NO Type: 3SU1400-1AA10-1BA0 Contact module with 1 contact element, 1 NO, screw terminal, for front plate mounting HOLDER Type: 3SU1550-0AA10-0AA0 Holder for 3 modules, universal, plastic/metal SIRIUS ACT Label holder Type: 3SU1900-0AP10-0AA0 Label holder, 22mm, frame rectangular at the bottom, black, for labeling plate 17.5 mm x 27 mm, for gluing	Siemens			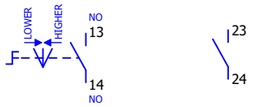
1			+UACJA10	-S222	/63.2:D /63.3:D

CONFIDENTIAL, ALL RIGHTS RESERVED DIN 34

Format ISO/DIN A3

Approved by Contractor			Reconstruction and Modernisation of HPP Perucica - Phase II	epcg	SINTAKSA A Voith Company Sintaksa - A Voith Company Ulica Domovinskog rata 104C, 21 000 Split, Hrvatska	Unit KA1 control cubicle circuit diagrams Device tag List	DRAWING No.: PERU-01-19-170-31-001	REV No.: 02	= UACJA10GH100 + UACJA10
Approved by Designer	Grga Kolić	15.6.2026.					Designer No.:	SALES No.:	PAGE 125
Checked by	Antonio Aleksić	15.6.2026.							PAGE 125 / 156
Drawn by	Tamara Trogrlić	15.6.2026.	PROJECT NAME	EMPLOYER	DESIGNER				

Qty. (pcs)	Equipment technical description	Manufacturer	Location (+)	Designation (-)	Symbol Position in shematics (Page, column)
	PUSHBUTTON, BLACK Pushbutton, 22 mm, round, metal, shiny, black, pushbutton, flat, momentary contact type, with holder, 1 NO, screw terminal Order No.: 3SU1150-0AB10-1BA0 SIRIUS ACT Label holder Type: 3SU1900-0AP10-0AA0 Label holder, 22mm, frame rectangular at the bottom, black, for labeling plate 17.5 mm x 27 mm, for gluing	Siemens			
			+UACJA10	-S203	/17.2:D
2			+UACJA10	-S302	/17.1:D
	SELECTOR SWITCH, O-I, BLACK, WHITE Selector switch, illuminable, 22 mm, round, metal, shiny, white, selector switch, short, 2 switch positions O-I, latching, actuating angle 90°, 10:30h/13:30h, with holder, 1 NO, screw terminal Order No.: 3SU1150-2BF60-1BA0 CONTACT MODULE 2NC Type: 3SU1400-1AA10-1EA0 Contact module with 2 contact elements, 2 NC, screw terminal, for front plate mounting SIRIUS ACT Label holder Type: 3SU1900-0AP10-0AA0 Label holder, 22mm, frame rectangular at the bottom, black, for labeling plate 17.5 mm x 27 mm, for gluing	Siemens			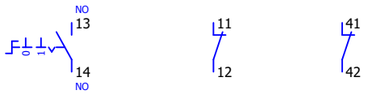
			+UACJA10	-S103	/16.2:D /63.2:C /63.6:C
	SELECTOR SWITCH, O-I, BLACK, WHITE Selector switch, illuminable, 22 mm, round, metal, shiny, white, selector switch, short, 2 switch positions O-I, latching, actuating angle 90°, 10:30h/13:30h, with holder, 1 NO, screw terminal Order No.: 3SU1150-2BF60-1BA0 Contact module with 1 contact element, 1 NC Type: 3SU1400-1AA10-1CA0 Contact module with 1 contact element, 1 NC, screw terminal, for front plate mounting SIRIUS ACT Label holder Type: 3SU1900-0AP10-0AA0 Label holder, 22mm, frame rectangular at the bottom, black, for labeling plate 17.5 mm x 27 mm, for gluing	Siemens			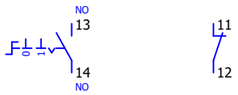
1			+UACJA10	-S104	/20.1:D

CONFIDENTIAL, ALL RIGHTS RESERVED DIN 34

Format ISO/DIN A3

Approved by Contractor			Reconstruction and Modernisation of HPP Perucica - Phase II	epcg	SINTAKSA A Voith Company Sintaksa - A Voith Company Ulica Domovinskog rata 104C, 21 000 Split, Hrvatska	Unit KA1 control cubicle circuit diagrams	DRAWING No.:	REV No.:	= UACJA10GH100
Approved by Designer	Grga Kolić	15.6.2026.					PERU-01-19-170-31-001	02	+ UACJA10
Checked by	Antonio Aleksić	15.6.2026.				Device tag List	Designer No.:	SALES No.:	PAGE 126
Drawn by	Tamara Trogrlić	15.6.2026.	PROJECT NAME	EMPLOYER	DESIGNER				PAGE 126 / 156

Qty. (pcs)	Equipment technical description	Manufacturer	Location (+)	Designation (-)	Symbol Position in shematics (Page, column)
	SELECTOR SWITCH, I-O-II, BLACK, WHITE Selector switch, illuminable, 22 mm, round, metal, shiny, white, selector switch, short, 3 switch positions I-O-II, latching, actuating angle 2x45°, 10:30h/12h/13:30h, with holder, 2x1NO+1NC, screw terminal Order No.: 3SU1150-2BL60-1LA0 SIRIUS ACT Label holder Type: 3SU1900-0AP10-0AA0 Label holder, 22mm, frame rectangular at the bottom, black, for labeling plate 17.5 mm x 27 mm, for gluing	Siemens			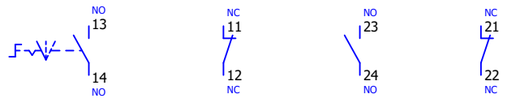
1			+UACJA10	-S121	/59.2:B /59.4:B /59.3:B /59.4:C
	KEY-OPERATED SWITCH RONIS, O-I RONIS key-operated switch, 22 mm, round, metal, shiny, lock number SB30, with 2 keys, 2 switch positions O-I, latching, actuating angle 90°, 10:30h/13:30h, key removal O+I, with holder, 1 NO+1 NC, screw terminal, possible special locks: 3SB31, 421, 455 Order No.: 3SU1150-4BF11-1FA0 SIRIUS ACT Label holder Type: 3SU1900-0AP10-0AA0 Label holder, 22mm, frame rectangular at the bottom, black, for labeling plate 17.5 mm x 27 mm, for gluing DIN rail mounting base - Ø 22 mm units - for control and signalling unit Type: A9A15151 DIN rail mounting base - Ø 22 mm units - for control and signalling unit	Siemens			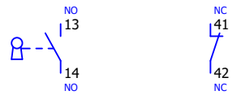
1			+UACJA10	-S100	/16.1:D
	ILLUMINATED PUSHBUTTON, RED Illuminated pushbutton, 22 mm, round, metal, shiny, red, pushbutton, flat, momentary contact type, with holder, 1 NO+1 NC, LED module with integrated LED 24 V AC/DC, screw terminal Order No.: 3SU1152-0AB20-1FA0 SIRIUS ACT Label holder Type: 3SU1900-0AP10-0AA0 Label holder, 22mm, frame rectangular at the bottom, black, for labeling plate 17.5 mm x 27 mm, for gluing	Siemens			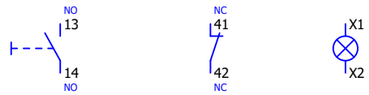
1			+UACJA10	-S290	/17.3:D /43.6:D

CONFIDENTIAL, ALL RIGHTS RESERVED DIN 34

Format ISO/DIN A3

Approved by Contractor			Reconstruction and Modernisation of HPP Perucica - Phase II	epcg	SINTAKSA A Voith Company Sintaksa - A Voith Company Ulica Domovinskog rata 104C, 21 000 Split, Hrvatska	Unit KA1 control cubicle circuit diagrams	DRAWING No.: PERU-01-19-170-31-001	REV No.: 02	= UACJA10GH100
Approved by Designer	Grga Kolić	15.6.2026.							+ UACJA10
Checked by	Antonio Aleksić	15.6.2026.				Device tag List	Designer No.:	SALES No.:	PAGE 127
Drawn by	Tamara Trogrlić	15.6.2026.	PROJECT NAME	EMPLOYER	DESIGNER				PAGE 127 / 156

Qty. (pcs)	Equipment technical description	Manufacturer	Location (+)	Designation (-)	Symbol Position in shematics (Page, column)	
	ILLUMINATED PUSHBUTTON, GREEN Illuminated pushbutton, 22 mm, round, metal, shiny, green, pushbutton, flat, momentary contact type, with holder, 1 NO, LED module with integrated LED 24 V AC/DC, screw terminal Order No.: 3SU1152-0AB40-1BA0 SIRIUS ACT Label holder Type: 3SU1900-0AP10-0AA0 Label holder, 22mm, frame rectangular at the bottom, black, for labeling plate 17.5 mm x 27 mm, for gluing	Siemens				
			+UACJA10	-S111	/17.7:D	/42.3:D
			+UACJA10	-S113	/18.1:D	
			+UACJA10	-S131	/17.6:D	/43.2:D
4			+UACJA10	-S291	/17.4:D	/43.7:D
	INDICATOR LIGHT, RED Indicator lights, 22 mm, round, metal, shiny, red, lens, smooth, with holder, LED module with integrated LED 24 V AC/DC, screw terminal Order No.: 3SU1152-6AA20-1AA0 SIRIUS ACT Label holder Type: 3SU1900-0AP10-0AA0 Label holder, 22mm, frame rectangular at the bottom, black, for labeling plate 17.5 mm x 27 mm, for gluing	Siemens				
1			+UACJA10	-H104	/43.4:D	
	INDICATOR LIGHT, YELLOW Indicator lights, 22 mm, round, metal, shiny, yellow, lens, smooth, with holder, LED module with integrated LED 24 V AC/DC, screw terminal Order No.: 3SU1152-6AA30-1AA0 SIRIUS ACT Label holder Type: 3SU1900-0AP10-0AA0 Label holder, 22mm, frame rectangular at the bottom, black, for labeling plate 17.5 mm x 27 mm, for gluing	Siemens				
1			+UACJA10	-H103	/43.3:D	

CONFIDENTIAL, ALL RIGHTS RESERVED DIN 34

Format ISO/DIN A3

Approved by Contractor			Reconstruction and Modernisation of HPP Perucica - Phase II	epcg	SINTAKSA A Voith Company Sintaksa - A Voith Company Ulica Domovinskog rata 104C, 21 000 Split, Hrvatska	Unit KA1 control cubicle circuit diagrams Device tag List	DRAWING No.: PERU-01-19-170-31-001	REV No.: 02	= UACJA10GH100
Approved by Designer	Grga Kolić	15.6.2026.							+ UACJA10
Checked by	Antonio Aleksić	15.6.2026.					Designer No.:	SALES No.:	PAGE 128
Drawn by	Tamara Trogrlić	15.6.2026.	PROJECT NAME	EMPLOYER	DESIGNER				PAGE 128 / 156

Qty. (pcs)	Equipment technical description	Manufacturer	Location (+)	Designation (-)	Symbol Position in shematics (Page, column)
	INDICATOR LIGHT, WHITE Indicator lights, 22 mm, round, metal, shiny, white, lens, smooth, with holder, LED module with integrated LED 24 V AC/DC, screw terminal Order No.: 3SU1152-6AA60-1AA0 SIRIUS ACT Label holder Type: 3SU1900-0AP10-0AA0 Label holder, 22mm, frame rectangular at the bottom, black, for labeling plate 17.5 mm x 27 mm, for gluing	Siemens			
1			+UACJA10	-H105	/43.5:D
	Contact module with 1 contact element, 1 NO Contact module with 1 contact element, 1 NO, screw terminal, for front plate mounting Order No.: 3SU1400-1AA10-1BA0 ILLUMINATED PUSHBUTTON, RED Type: 3SU1051-0AB20-0AA0 Illuminated pushbutton, 22 mm, round, metal, shiny, red, pushbutton, flat, momentary contact type HOLDER Type: 3SU1550-0AA10-0AA0 Holder for 3 modules, universal, plastic/metal LED MODULE, RED Type: 3SU1401-1BB20-1AA0 LED MODULE WITH INTEGRATED LED 24V AC/DC, RED, SCREW TERMINAL, FOR FRONT PLATE MOUNTING SIRIUS ACT Label holder Type: 3SU1900-0AP10-0AA0 Label holder, 22mm, frame rectangular at the bottom, black, for labeling plate 17.5 mm x 27 mm, for gluing	Siemens			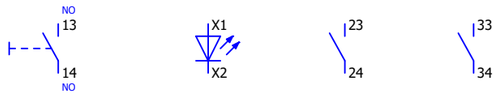
			+UACJA10	-S114	/18.2:D /64.2:C /64.5:B
2			+UACJA10	-S130	/17.5:D /43.1:D
	Contactor relay Contactor relay, 44E, DIN EN 50011, 4NO + 4NC, screw terminal DC operation 24 V DC Order No.: 3TH4244-0BB4 Surge suppressor Type: 3TX7402-3A Surge suppressor Interference suppression diode with cable spacer 24-250 V DC for mounting to coil terminal for contactor relays 3TH4	Siemens			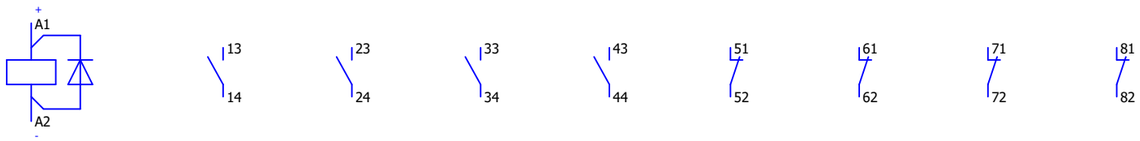
			+UACJA10	-K304	/57.5:E /57.4:B /54.4:B /54.4:B /54.4:C
2			+UACJA10	-K305	/57.5:E /57.4:B /55.5:C /55.5:C /55.5:D

CONFIDENTIAL, ALL RIGHTS RESERVED DIN 34

Format ISO/DIN A3

Approved by Contractor			Reconstruction and Modernisation of HPP Perucica - Phase II	epcg	SINTAKSA A Voith Company Sintaksa - A Voith Company Ulica Domovinskog rata 104Ç, 21 000 Split, Hrvatska	Unit KA1 control cubicle circuit diagrams Device tag List	DRAWING No.: PERU-01-19-170-31-001	REV No.: 02	= UACJA10GH100
Approved by Designer	Grga Kolić	15.6.2026.							+ UACJA10
Checked by	Antonio Aleksić	15.6.2026.					Designer No.:	SALES No.:	PAGE 129
Drawn by	Tamara Trogrlić	15.6.2026.	PROJECT NAME	EMPLOYER	DESIGNER				PAGE 129 / 156

Qty. (pcs)	Equipment technical description	Manufacturer	Location (+)	Designation (-)	Symbol Position in shematics (Page, column)							
	Contactor relay Contactor relay, 53E, DIN EN 50011, 5NO + 3NC, screw terminal DC operation 24 V DC Order No.: 3TH4253-0BB4 Surge suppressor Type: 3TX7402-3A Surge suppressor Interference suppression diode with cable spacer 24-250 V DC for mounting to coil terminal for contactor relays 3TH4	Siemens			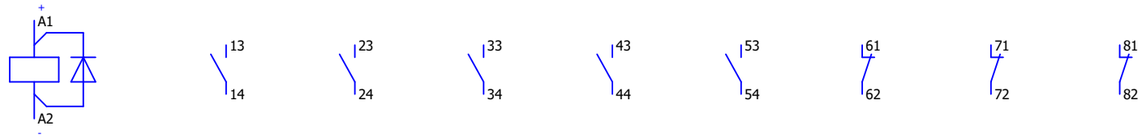							
			+UACJA10	-K401	/64.2:E	/54.2:B	/54.2:B	/54.2:E	/54.3:E	/19.4:D		
2			+UACJA10	-K402	/64.4:E	/54.6:B	/54.6:B	/54.6:E	/54.7:E	/19.5:D		
	RCBO RCBO, 10 kA, 1P+N, type AC, 30 mA, C-char, In: 13 A, Un AC: 230 V Order No.: 5SU1354-1KK13	Siemens			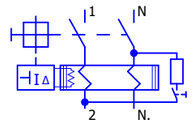							
1			+UACJA10	-F0	/5.2:C							
	Miniature circuit breaker 230/400V 10kA 1-pole B curve 2A Order No.: 5SY4102-6 Auxiliary switch Type: 5ST3016 1 C/O For MCB 5SL, 5SY, 5SP; Incorporated switch 5TL1 RCBO 5SU1, RC 5SV Rated voltage: 30 V	Siemens			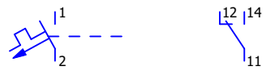							
			+UACJA10	-F135	/9.8:B	/15.7:D						
			+UACJA10	-F137	/10.2:B	/15.7:B						
			+UACJA10	-F138	/10.3:B	/15.7:C						
4			+UACJA10	-F147	/11.7:B							
	SENTRON Miniature circuit breaker Miniature circuit breaker 230/400 V 10kA, 1-pole, B, 6 A, D=70 mm Order No.: 5SY4106-6 Auxiliary switch Type: 5ST3016 1 C/O For MCB 5SL, 5SY, 5SP; Incorporated switch 5TL1 RCBO 5SU1, RC 5SV Rated voltage: 30 V	Siemens			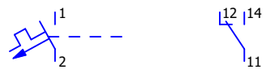							
			+UACJA10	-F131	/9.1:B	/15.7:B						

CONFIDENTIAL, ALL RIGHTS RESERVED DIN 34

Format ISO/DIN A3

Approved by Contractor			Reconstruction and Modernisation of HPP Perucica - Phase II	epcg	SINTAKSA A Voith Company Sintaksa - A Voith Company Ulica Domovinskog rata 104C, 21 000 Split, Hrvatska	Unit KA1 control cubicle circuit diagrams	DRAWING No.: PERU-01-19-170-31-001	REV No.: 02	= UACJA10GH100
Approved by Designer	Grga Kolić	15.6.2026.							+ UACJA10
Checked by	Antonio Aleksić	15.6.2026.				Device tag List	Designer No.:	SALES No.:	PAGE 130
Drawn by	Tamara Trogrlić	15.6.2026.	PROJECT NAME	EMPLOYER	DESIGNER				PAGE 130 / 156

Qty. (pcs)	Equipment technical description	Manufacturer	Location (+)	Designation (-)	Symbol Position in shematics (Page, column)	
	SENTRON Miniature circuit breaker Miniature circuit breaker 230/400 V 10kA, 1-pole, B, 6 A, D=70 mm Order No.: 5SY4106-6 Auxiliary switch Type: 5ST3016 1 C/O For MCB 5SL, 5SY, 5SP; Incorporated switch 5TL1 RCBO 5SU1, RC 5SV Rated voltage: 30 V	Siemens			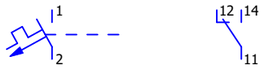	
			+UACJA10	-F132	/9.4:B	/15.6:B
			+UACJA10	-F133	/9.6:B	/15.7:C
			+UACJA10	-F134	/9.7:B	/15.7:C
			+UACJA10	-F139	/10.4:B	/15.6:C
			+UACJA10	-F140	/10.6:B	/15.7:C
			+UACJA10	-F141	/10.7:B	/15.7:D
			+UACJA10	-F142	/11.1:B	/15.6:C
			+UACJA10	-F143	/11.2:B	/15.6:D
			+UACJA10	-F144	/11.3:B	/15.6:B
			+UACJA10	-F145	/11.4:B	
12			+UACJA10	-F146	/11.6:B	
	Miniature circuit breaker, 10kA, 1-pole, B, 10A 230/400 V 10kA 1-pole B curve 10A Order No.: 5SY4110-6 Auxiliary switch Type: 5ST3016 1 C/O For MCB 5SL, 5SY, 5SP; Incorporated switch 5TL1 RCBO 5SU1, RC 5SV Rated voltage: 30 V	Siemens			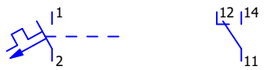	
1			+UACJA10	-F136	/10.1:B	/15.7:D

CONFIDENTIAL, ALL RIGHTS RESERVED DIN 34

Format ISO/DIN A3

Approved by Contractor			Reconstruction and Modernisation of HPP Perucica - Phase II	epcg	SINTAKSA A Voith Company Sintaksa - A Voith Company Ulica Domovinskog rata 104C, 21 000 Split, Hrvatska	Unit KA1 control cubicle circuit diagrams Device tag List	DRAWING No.: PERU-01-19-170-31-001	REV No.: 02	= UACJA10GH100 + UACJA10
Approved by Designer	Grga Kolić	15.6.2026.					Designer No.:	SALES No.:	PAGE 131
Checked by	Antonio Aleksić	15.6.2026.							PAGE 131 / 156
Drawn by	Tamara Trogrlić	15.6.2026.	PROJECT NAME	EMPLOYER	DESIGNER				

Qty. (pcs)	Equipment technical description	Manufacturer	Location (+)	Designation (-)	Symbol Position in shematics (Page, column)	
	6A, 2P, 440 VDC, B curve MCB - 440 VDC Number poles: 2P Class: B Max current: 6A Order No.: 5SY5206-6 Auxiliary switch Type: 5ST3016 1 C/O For MCB 5SL, 5SY, 5SP; Incorporated switch 5TL1 RCBO 5SU1, RC 5SV Rated voltage: 30 V	Siemens			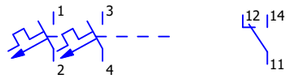	
			+UACJA10	-F13	/7.1:C	/15.5:B
			+UACJA10	-F14	/7.2:C	/15.5:C
			+UACJA10	-F15	/7.4:C	/15.5:C
4			+UACJA10	-F16	/7.5:C	
	10A, 2P, 440 VDC, B curve MCB - 440 VDC Number poles: 2P Class: B Max current: 10A Order No.: 5SY5210-6 Auxiliary switch Type: 5ST3016 1 C/O For MCB 5SL, 5SY, 5SP; Incorporated switch 5TL1 RCBO 5SU1, RC 5SV Rated voltage: 30 V	Siemens			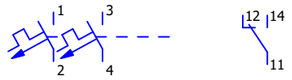	
			+UACJA10	-F11	/6.3:D	/15.2:B
2			+UACJA10	-F12	/6.4:D	/15.3:B
	Power supply SITOP PSU8200M 20A stabilized power supply input: 120-230 V AC 110-220 V DC output: 24 V DC/20 A Type: SITOP PSU8200 Order No.: 6EP1336-3BA10	Siemens			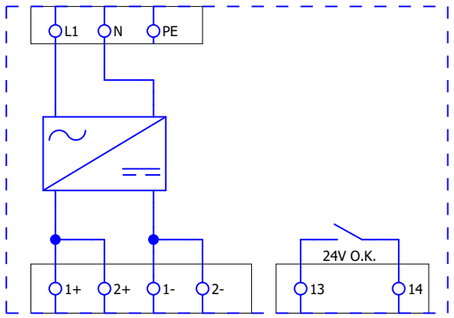	
			+UACJA10	-U101	/8.2:C	

CONFIDENTIAL, ALL RIGHTS RESERVED DIN 34

Format ISO/DIN A3

Approved by Contractor			Reconstruction and Modernisation of HPP Perucica - Phase II	epcg	SINTAKSA A Voith Company Sintaksa - A Voith Company Ulica Domovinskog rata 104Ç, 21 000 Split, Hrvatska	Unit KA1 control cubicle circuit diagrams Device tag List	DRAWING No.: PERU-01-19-170-31-001	REV No.: 02	= UACJA10GH100 + UACJA10
Approved by Designer	Grga Kolić	15.6.2026.					Designer No.:	SALES No.:	PAGE 132
Checked by	Antonio Aleksić	15.6.2026.							PAGE 132 / 156
Drawn by	Tamara Trogrlić	15.6.2026.	PROJECT NAME	EMPLOYER	DESIGNER				

Qty. (pcs)	Equipment technical description	Manufacturer	Location (+)	Designation (-)	Symbol Position in shematics (Page, column)
	Power supply SITOP PSU8200M 20A stabilized power supply input: 120-230 V AC 110-220 V DC output: 24 V DC/20 A Type: SITOP PSU8200 Order No.: 6EP1336-3BA10	Siemens			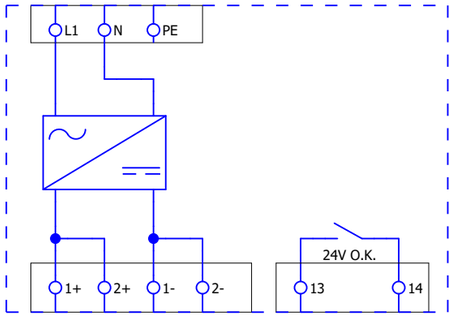
2			+UACJA10	-U102	/8.5:C
	Redundancy module Input/output: DC 24-48V/40A Suitable for decoupling two SITOP power supplies with max. 20 A output current each Type: SITOP RED1200 Order No.: 6EP4347-7RB00-0AX0	Siemens			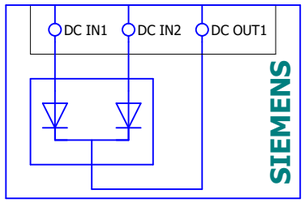
1			+UACJA10	-V101	/8.2:E
	Fast lock-out relay 4 CO, 220VDC Fast-acting relay: -Type:7PA2341 -Auxiliary voltage: 220 V DC -Operating time: 8 ms -Order No. of housing for base: 7XP9013-0 -With reset pushbutton Order No.: 7PA2341 Socket Type: 7XP9013-0 SOCKET FOR SURFACE MOUNTING FOR 7PA23, 7PA27 AND AND SINGLE-PHASE 7PA30 RELAY	Siemens			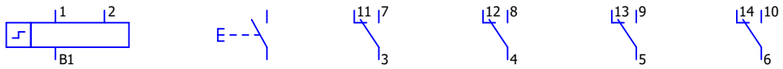
1			+UACJA10	-K310	/58.2:D /58.3:D /19.1:D /51.5:B
	Indicator Light The indicators glow in two colors: red or green. Power supply is connected as follows: X0 - common terminal (ground) X1 - red color (voltage) X2 - green color (voltage) Diameter - 22mm 24 AC/DC Order No.: SPAMEL.PK22-WP/24				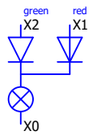
			+UACJA10	-H101	/42.5:D
2			+UACJA10	-H106	/42.1:D

CONFIDENTIAL, ALL RIGHTS RESERVED DIN 34

Format ISO/DIN A3

Approved by Contractor			Reconstruction and Modernisation of HPP Perucica - Phase II	epcg	SINTAKSA A Voith Company Sintaksa - A Voith Company Ulica Domovinskog rata 104C, 21 000 Split, Hrvatska	Unit KA1 control cubicle circuit diagrams	DRAWING No.: PERU-01-19-170-31-001	REV No.: 02	= UACJA10GH100
Approved by Designer	Grga Kolić	15.6.2026.							+ UACJA10
Checked by	Antonio Aleksić	15.6.2026.				Device tag List	Designer No.:	SALES No.:	PAGE 133
Drawn by	Tamara Trogrlić	15.6.2026.	PROJECT NAME	EMPLOYER	DESIGNER				PAGE 133 / 156

Qty. (pcs)	Equipment technical description	Manufacturer	Location (+)	Designation (-)	Symbol Position in shematics (Page, column)
1	Thermostat HellermannTyton Thermostat, NC contact 0...+60°C Type: THR02 Order No.: THR02	Alfa Electric	+UACJA10	-B101	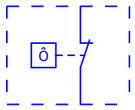 /5.5:E
1	Measuring instrument VOITH Frequency converter with electrical isolation for measuring the speed from the residual voltage of the generator in connection with a speed transducer. Type: VFU1 Order No.: VFU1		+UACJA10	-U201	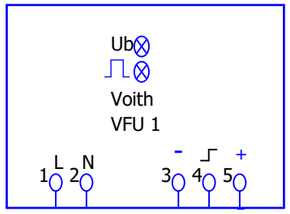 /74.8:F

CONFIDENTIAL, ALL RIGHTS RESERVED DIN 34

Format ISO/DIN A3

Approved by Contractor			Reconstruction and Modernisation of HPP Perucica - Phase II	epcg	SINTAKSA A Voith Company Sintaksa - A Voith Company Ulica Domovinskog rata 104Ç, 21 000 Split, Hrvatska	Unit KA1 control cubicle circuit diagrams Device tag List	DRAWING No.: PERU-01-19-170-31-001	REV No.: 02	= UACJA10GH100
Approved by Designer	Grga Kolić	15.6.2026.							+ UACJA10
Checked by	Antonio Aleksić	15.6.2026.					Designer No.:	SALES No.:	PAGE 134
Drawn by	Tamara Trogrlić	15.6.2026.	PROJECT NAME	EMPLOYER	DESIGNER				PAGE 134 / 156

Cable name :	-1WT100	Number of conductors :	7	Description :
Cable type :	LiYCY	Number of used conductors :	5	
		Cable cross section :	0.75	

External Connections			Connection color/number	Internal Connections		
To device	Pin designation	Page/column		From device	Pin designation	Page/column
=T1+T1-X1	1	=UACJA10GH100+UACJA10/10.8:E	WH	=UACJA10GH100+UACJA10-X141	2:A	=UACJA10GH100+UACJA10/10.8:D
=T1+T1-X1	5	=UACJA10GH100+UACJA10/10.8:E	BN	=UACJA10GH100+UACJA10-X141	20:A	=UACJA10GH100+UACJA10/10.8:D
=T1+T1-X1	9	=UACJA10GH100+UACJA10/45.3:C	GN	=UACJA10GH100+UACJA10-X135	12:A	=UACJA10GH100+UACJA10/45.3:E
=T1+T1-X1	10	=UACJA10GH100+UACJA10/45.3:C	YE	=UACJA10GH100+UACJA10-PE_SH	6:A	=UACJA10GH100+UACJA10/45.3:C
=T1+T1-X1	11	=UACJA10GH100+UACJA10/48.7:C	GY	=UACJA10GH100+UACJA10-X51	5:A	=UACJA10GH100+UACJA10/48.7:D
			PK			
			BU			

Cable name :	-1WT101	Number of conductors :	7	Description :
Cable type :	LiYCY	Number of used conductors :	4	
		Cable cross section :	0.75	

External Connections			Connection color/number	Internal Connections		
To device	Pin designation	Page/column		From device	Pin designation	Page/column
=T1+T1-X1	12	=UACJA10GH100+UACJA10/48.5:C	WH	=UACJA10GH100+UACJA10-X51	1:A	=UACJA10GH100+UACJA10/48.5:D
=T1+T1-X1	13	=UACJA10GH100+UACJA10/48.5:C	BN	=UACJA10GH100+UACJA10-X51	2:A	=UACJA10GH100+UACJA10/48.5:D
=T1+T1-X1	14	=UACJA10GH100+UACJA10/48.5:C	GN	=UACJA10GH100+UACJA10-X51	3:A	=UACJA10GH100+UACJA10/48.5:D
=T1+T1-X1	15	=UACJA10GH100+UACJA10/30.4:C	YE	=UACJA10GH100+UACJA10-1K114	A1	=UACJA10GH100+UACJA10/30.4:D
			GY			
			PK			
			BU			

Cable name :	-01-0UA01+UV01-7-104	Number of conductors :	10	Description :
Cable type :	NYCY	Number of used conductors :	10	
		Cable cross section :	2.5	

External Connections			Connection color/number	Internal Connections		
To device	Pin designation	Page/column		From device	Pin designation	Page/column
=0UA01+UV01-X30	1	=UACJA10GH100+UACJA10/10.4:E	1BK	=UACJA10GH100+UACJA10-X139	1:A	=UACJA10GH100+UACJA10/10.4:D
=0UA01+UV01-X30	2	=UACJA10GH100+UACJA10/10.5:E	2BK	=UACJA10GH100+UACJA10-X139	12:A	=UACJA10GH100+UACJA10/10.5:D
=0UA01+UV01-X11	18	=UACJA10GH100+UACJA10/34.4:B	3BK	=UACJA10GH100+UACJA10-X139	2:A	=UACJA10GH100+UACJA10/34.4:B
=0UA01+UV01-X11	19	=UACJA10GH100+UACJA10/34.4:C	4BK	=UACJA10GH100+UACJA10-1K154	A1	=UACJA10GH100+UACJA10/34.4:D
=0UA01+UV01-X11	23	=UACJA10GH100+UACJA10/34.5:B	5BK	=UACJA10GH100+UACJA10-X139	3:A	=UACJA10GH100+UACJA10/34.5:B
=0UA01+UV01-X11	21	=UACJA10GH100+UACJA10/34.5:C	6BK	=UACJA10GH100+UACJA10-1K155	A1	=UACJA10GH100+UACJA10/34.5:D
=0UA01+UV01-X11	2	=UACJA10GH100+UACJA10/34.6:B	7BK	=UACJA10GH100+UACJA10-X139	4:A	=UACJA10GH100+UACJA10/34.6:B
=0UA01+UV01-X11	3	=UACJA10GH100+UACJA10/34.6:C	8BK	=UACJA10GH100+UACJA10-1K156	A1	=UACJA10GH100+UACJA10/34.6:D
=0UA01+UV01-X11	27	=UACJA10GH100+UACJA10/34.7:C	9BK	=UACJA10GH100+UACJA10-1K157	A1	=UACJA10GH100+UACJA10/34.7:D
=0UA01+UV01-X11	29	=UACJA10GH100+UACJA10/34.7:B	10BK	=UACJA10GH100+UACJA10-X139	5:A	=UACJA10GH100+UACJA10/34.7:B

CONFIDENTIAL, ALL RIGHTS RESERVED DIN 34

Format ISO/DIN A3

Approved by Contractor			Reconstruction and Modernisation of HPP Perucica - Phase II	epcg	SINTAKSA A Voith Company	Unit KA1 control cubicle circuit diagrams	DRAWING No.: PERU-01-19-170-31-001	REV No.:	= UACJA10GH100
Approved by Designer	Grga Kolić	15.6.2026.							+ UACJA10
Checked by	Antonio Aleksić	15.6.2026.			Sintaksa - A Voith Company Ulica Domovinskog rata 104C, 21 000 Split, Hrvatska	CABLE DIAGRAM	Designer No.:	SALES No.:	PAGE 135
Drawn by	Tamara Trogrlić	15.6.2026.	PROJECT NAME	EMPLOYER	DESIGNER				PAGE 135 / 156

Cable name :	-01-0XC01+XC01-7-101	Number of conductors :	10	Description :
Cable type :	NYCY	Number of used conductors :	8	
		Cable cross section :	2.5	

External Connections			Connection color/number	Internal Connections		
To device	Pin designation	Page/column		From device	Pin designation	Page/column
=0XC01+XC01-X01	1	=UACJA10GH100+UACJA10/35.2:B	1BK	=UACJA10GH100+UACJA10-X139	7:A	=UACJA10GH100+UACJA10/35.2:B
=0XC01+XC01-X02	1	=UACJA10GH100+UACJA10/35.2:C	2BK	=UACJA10GH100+UACJA10-1K162	A1	=UACJA10GH100+UACJA10/35.2:D
=0XC01+XC01-X02	3	=UACJA10GH100+UACJA10/35.3:C	3BK	=UACJA10GH100+UACJA10-1K163	A1	=UACJA10GH100+UACJA10/35.3:D
=0XC01+XC01-X02	6	=UACJA10GH100+UACJA10/35.4:C	4BK	=UACJA10GH100+UACJA10-1K164	A1	=UACJA10GH100+UACJA10/35.4:D
=0XC01+XC01-X02	5	=UACJA10GH100+UACJA10/35.5:C	5BK	=UACJA10GH100+UACJA10-1K165	A1	=UACJA10GH100+UACJA10/35.5:D
=0XC01+XC01-X02	4	=UACJA10GH100+UACJA10/35.6:C	6BK	=UACJA10GH100+UACJA10-1K166	A1	=UACJA10GH100+UACJA10/35.6:D
=0XC01+XC01-X02	7	=UACJA10GH100+UACJA10/35.7:C	7BK	=UACJA10GH100+UACJA10-1K167	A1	=UACJA10GH100+UACJA10/35.7:D
=0XC01+XC01-X02	2	=UACJA10GH100+UACJA10/35.8:C	8BK	=UACJA10GH100+UACJA10-1K168	A1	=UACJA10GH100+UACJA10/35.8:D

Cable name :	-01-1NA01+NA01-1-204	Number of conductors :	4	Description :
Cable type :	NYY-J	Number of used conductors :	3	
		Cable cross section :	4	

External Connections			Connection color/number	Internal Connections		
To device	Pin designation	Page/column		From device	Pin designation	Page/column
=1NA01+NA01-X10	16	=UACJA10GH100+UACJA10/5.2:B	BN	=UACJA10GH100+UACJA10-X0	1:A	=UACJA10GH100+UACJA10/5.2:C
			BK			
=1NA01+NA01-N		=UACJA10GH100+UACJA10/5.2:B	GY	=UACJA10GH100+UACJA10-X0	2:A	=UACJA10GH100+UACJA10/5.2:C
=1NA01+NA01-X10	19/PE	=UACJA10GH100+UACJA10/5.3:B	GNYE	=UACJA10GH100+UACJA10-X0	3:A	=UACJA10GH100+UACJA10/5.3:C

Cable name :	-01-1NA01+NA01-2-203	Number of conductors :	3	Description :
Cable type :	NYY	Number of used conductors :	2	
		Cable cross section :	4	

External Connections			Connection color/number	Internal Connections		
To device	Pin designation	Page/column		From device	Pin designation	Page/column
=1NA01+NA01-X4	5	=UACJA10GH100+UACJA10/6.1:F	BN	=UACJA10GH100+UACJA10-X10	1:A	=UACJA10GH100+UACJA10/6.1:E
=1NA01+NA01-X4	6	=UACJA10GH100+UACJA10/6.1:F	BU	=UACJA10GH100+UACJA10-X10	2:A	=UACJA10GH100+UACJA10/6.1:E
			GNYE			

Cable name :	-01-1NA01+NA01-2-204	Number of conductors :	3	Description :
Cable type :	NYY	Number of used conductors :	2	
		Cable cross section :	4	

External Connections			Connection color/number	Internal Connections		
To device	Pin designation	Page/column		From device	Pin designation	Page/column
=1NA01+NA01-X4	9	=UACJA10GH100+UACJA10/6.2:F	BN	=UACJA10GH100+UACJA10-X10	3:A	=UACJA10GH100+UACJA10/6.2:E
=1NA01+NA01-X4	10	=UACJA10GH100+UACJA10/6.2:F	BU	=UACJA10GH100+UACJA10-X10	4:A	=UACJA10GH100+UACJA10/6.2:E
			GNYE			

CONFIDENTIAL, ALL RIGHTS RESERVED DIN 34

Format ISO/DIN A3

Approved by Contractor			Reconstruction and Modernisation of HPP Perucica - Phase II	epcg	SINTAKSA A Voith Company	Unit KA1 control cubicle circuit diagrams	DRAWING No.: PERU-01-19-170-31-001	REV No.:	= UACJA10GH100
Approved by Designer	Grga Kolić	15.6.2026.			Sintaksa - A Voith Company Ulica Domovinskog rata 104C, 21 000 Split, Hrvatska				+ UACJA10
Checked by	Antonio Aleksić	15.6.2026.				CABLE DIAGRAM	Designer No.:	SALES No.:	PAGE 136
Drawn by	Tamara Trogrlić	15.6.2026.	PROJECT NAME	EMPLOYER	DESIGNER				PAGE 136 / 156

Cable name :	-01-1NA01+NA01-4-301	Number of conductors :	2	Description :
Cable type :	NYCY	Number of used conductors :	2	
		Cable cross section :	2.5	

External Connections			Connection color/number	Internal Connections		
To device	Pin designation	Page/column		From device	Pin designation	Page/column
=1NA01+NA01-X11	1	=UACJA10GH100+UACJA10/20.3:B	BN	=UACJA10GH100+UACJA10-X137	2:A	=UACJA10GH100+UACJA10/20.3:B
=1NA01+NA01-X11	2	=UACJA10GH100+UACJA10/20.3:C	BU	=UACJA10GH100+UACJA10-1K11	A1	=UACJA10GH100+UACJA10/20.3:D

Cable name :	-01-1NA01+NA01-4-302	Number of conductors :	2	Description :
Cable type :	NYCY	Number of used conductors :	2	
		Cable cross section :	2.5	

External Connections			Connection color/number	Internal Connections		
To device	Pin designation	Page/column		From device	Pin designation	Page/column
=1NA01+NA01-X11	43	=UACJA10GH100+UACJA10/21.5:C	BN	=UACJA10GH100+UACJA10-1K25	A1	=UACJA10GH100+UACJA10/21.5:D
=1NA01+NA01-X11	7	=UACJA10GH100+UACJA10/21.5:B	BU	=UACJA10GH100+UACJA10-X137	5:A	=UACJA10GH100+UACJA10/21.5:B

Cable name :	-01-1NA01+NA01-4-303	Number of conductors :	19	Description :
Cable type :	NYCY	Number of used conductors :	8	
		Cable cross section :	2.5	

External Connections			Connection color/number	Internal Connections		
To device	Pin designation	Page/column		From device	Pin designation	Page/column
=1NA01+NA01-X11	10	=UACJA10GH100+UACJA10/21.4:B	1BK	=UACJA10GH100+UACJA10-X137	4:A	=UACJA10GH100+UACJA10/21.4:B
=1NA01+NA01-X11	12	=UACJA10GH100+UACJA10/21.4:C	2BK	=UACJA10GH100+UACJA10-1K24	A1	=UACJA10GH100+UACJA10/21.4:D
=1NA01+NA01-X11	16	=UACJA10GH100+UACJA10/20.4:C	3BK	=UACJA10GH100+UACJA10-1K12	A1	=UACJA10GH100+UACJA10/20.4:D
=1NA01+NA01-X11	24	=UACJA10GH100+UACJA10/20.6:C	5BK	=UACJA10GH100+UACJA10-1K14	A1	=UACJA10GH100+UACJA10/20.6:D
=1NA01+NA01-X11	32	=UACJA10GH100+UACJA10/20.8:C	7BK	=UACJA10GH100+UACJA10-1K16	A1	=UACJA10GH100+UACJA10/20.8:D
=1NA01+NA01-X11	36	=UACJA10GH100+UACJA10/21.1:C	8BK	=UACJA10GH100+UACJA10-1K21	A1	=UACJA10GH100+UACJA10/21.1:D
=1NA01+NA01-X11	40	=UACJA10GH100+UACJA10/21.2:C	9BK	=UACJA10GH100+UACJA10-1K22	A1	=UACJA10GH100+UACJA10/21.2:D
=1NA01+NA01-X11	44	=UACJA10GH100+UACJA10/21.3:C	10BK	=UACJA10GH100+UACJA10-1K23	A1	=UACJA10GH100+UACJA10/21.3:D

Cable name :	-01-1NA01+NA01-4-304	Number of conductors :	2	Description :
Cable type :	NYCY	Number of used conductors :	2	
		Cable cross section :	2.5	

External Connections			Connection color/number	Internal Connections		
To device	Pin designation	Page/column		From device	Pin designation	Page/column
=1NA01+NA01-X5	1	=UACJA10GH100+UACJA10/21.6:B	BN	=UACJA10GH100+UACJA10-X137	6:A	=UACJA10GH100+UACJA10/21.6:B
=1NA01+NA01-X5	2	=UACJA10GH100+UACJA10/21.6:C	BU	=UACJA10GH100+UACJA10-1K26	A1	=UACJA10GH100+UACJA10/21.6:D

CONFIDENTIAL, ALL RIGHTS RESERVED DIN 34

Format ISO/DIN A3

Approved by Contractor			Reconstruction and Modernisation of HPP Perucica - Phase II	epcg	SINTAKSA A Voith Company	Unit KA1 control cubicle circuit diagrams	DRAWING No.: PERU-01-19-170-31-001	REV No.:	= UACJA10GH100
Approved by Designer	Grga Kolić	15.6.2026.			Sintaksa - A Voith Company Ulica Domovinskog rata 104C, 21 000 Split, Hrvatska				+ UACJA10
Checked by	Antonio Aleksić	15.6.2026.				CABLE DIAGRAM	Designer No.:	SALES No.:	PAGE 137
Drawn by	Tamara Trogrlić	15.6.2026.	PROJECT NAME	EMPLOYER	DESIGNER				PAGE 137 / 156

Cable name :	-01-1NA01+NA01-4-305	Number of conductors :	2	Description :
Cable type :	NYCY	Number of used conductors :	2	
		Cable cross section :	2.5	

External Connections			Connection color/number	Internal Connections		
To device	Pin designation	Page/column		From device	Pin designation	Page/column
=1NA01+NA01-X5	7	=UACJA10GH100+UACJA10/21.7:B	BN	=UACJA10GH100+UACJA10-X137	7:A	=UACJA10GH100+UACJA10/21.7:B
=1NA01+NA01-X5	9	=UACJA10GH100+UACJA10/21.7:C	BU	=UACJA10GH100+UACJA10-1K27	A1	=UACJA10GH100+UACJA10/21.7:D

Cable name :	-01-1NA01+NA01-4-306	Number of conductors :	2	Description :
Cable type :	NYCY	Number of used conductors :	2	
		Cable cross section :	2.5	

External Connections			Connection color/number	Internal Connections		
To device	Pin designation	Page/column		From device	Pin designation	Page/column
=1NA01+NA01-X5	10	=UACJA10GH100+UACJA10/21.8:B	BN	=UACJA10GH100+UACJA10-X137	8:A	=UACJA10GH100+UACJA10/21.8:B
=1NA01+NA01-X5	11	=UACJA10GH100+UACJA10/21.8:C	BU	=UACJA10GH100+UACJA10-1K28	A1	=UACJA10GH100+UACJA10/21.8:D

Cable name :	-01-1NA01+NA01-4-307	Number of conductors :	2	Description :
Cable type :	NYCY	Number of used conductors :	2	
		Cable cross section :	2.5	

External Connections			Connection color/number	Internal Connections		
To device	Pin designation	Page/column		From device	Pin designation	Page/column
=1NA01+NA01-X5	16	=UACJA10GH100+UACJA10/22.1:B	BN	=UACJA10GH100+UACJA10-X137	9:A	=UACJA10GH100+UACJA10/22.1:B
=1NA01+NA01-X5	18	=UACJA10GH100+UACJA10/22.1:C	BU	=UACJA10GH100+UACJA10-1K31	A1	=UACJA10GH100+UACJA10/22.1:D

Cable name :	-01-1NA01+NA01-4-308	Number of conductors :	2	Description :
Cable type :	NYCY	Number of used conductors :	2	
		Cable cross section :	2.5	

External Connections			Connection color/number	Internal Connections		
To device	Pin designation	Page/column		From device	Pin designation	Page/column
=1NA01+NA01-X5	19	=UACJA10GH100+UACJA10/23.5:B	BN	=UACJA10GH100+UACJA10-X137	13:A	=UACJA10GH100+UACJA10/23.5:B
=1NA01+NA01-X5	61	=UACJA10GH100+UACJA10/23.5:C	BU	=UACJA10GH100+UACJA10-1K45	A1	=UACJA10GH100+UACJA10/23.5:D

Cable name :	-01-1NA01+NA01-4-309	Number of conductors :	19	Description :
Cable type :	NYCY	Number of used conductors :	14	
		Cable cross section :	2.5	

External Connections			Connection color/number	Internal Connections		
To device	Pin designation	Page/column		From device	Pin designation	Page/column
=1NA01+NA01-X5	20	=UACJA10GH100+UACJA10/22.2:B	1BK	=UACJA10GH100+UACJA10-X137	10:A	=UACJA10GH100+UACJA10/22.2:B
=1NA01+NA01-X5	22	=UACJA10GH100+UACJA10/22.2:C	2BK	=UACJA10GH100+UACJA10-1K32	A1	=UACJA10GH100+UACJA10/22.2:D
=1NA01+NA01-X5	46	=UACJA10GH100+UACJA10/22.3:C	3BK	=UACJA10GH100+UACJA10-1K33	A1	=UACJA10GH100+UACJA10/22.3:D
=1NA01+NA01-X5	26	=UACJA10GH100+UACJA10/22.4:C	4BK	=UACJA10GH100+UACJA10-1K34	A1	=UACJA10GH100+UACJA10/22.4:D
=1NA01+NA01-X5	50	=UACJA10GH100+UACJA10/22.5:C	5BK	=UACJA10GH100+UACJA10-1K35	A1	=UACJA10GH100+UACJA10/22.5:D
=1NA01+NA01-X5	30	=UACJA10GH100+UACJA10/22.6:C	6BK	=UACJA10GH100+UACJA10-1K36	A1	=UACJA10GH100+UACJA10/22.6:D
=1NA01+NA01-X5	54	=UACJA10GH100+UACJA10/22.7:C	7BK	=UACJA10GH100+UACJA10-1K37	A1	=UACJA10GH100+UACJA10/22.7:D
=1NA01+NA01-X5	34	=UACJA10GH100+UACJA10/22.8:C	8BK	=UACJA10GH100+UACJA10-1K38	A1	=UACJA10GH100+UACJA10/22.8:D

CONFIDENTIAL, ALL RIGHTS RESERVED DIN 34

Format ISO/DIN A3

Approved by Contractor			Reconstruction and Modernisation of HPP Perucica - Phase II	epcg	SINTAKSA A Voith Company	Unit KA1 control cubicle circuit diagrams	DRAWING No.:	REV No.:	= UACJA10GH100
Approved by Designer	Grga Kolić	15.6.2026.					PERU-01-19-170-31-001		+ UACJA10
Checked by	Antonio Aleksić	15.6.2026.			Sintaksa - A Voith Company Ulica Domovinskog rata 104C, 21 000 Split, Hrvatska	CABLE DIAGRAM	Designer No.:	SALES No.:	PAGE 138
Drawn by	Tamara Trogrlić	15.6.2026.	PROJECT NAME	EMPLOYER	DESIGNER				PAGE 138 / 156

Cable name :	-01-1NA01+NA01-4-309	Number of conductors :	19	Description :
Cable type :	NYCY	Number of used conductors :	14	
		Cable cross section :	2.5	

External Connections			Connection color/number	Internal Connections		
To device	Pin designation	Page/column		From device	Pin designation	Page/column
=1NA01+NA01-X5	58	=UACJA10GH100+UACJA10/23.1:C	**9BK**	=UACJA10GH100+UACJA10-1K41	A1	=UACJA10GH100+UACJA10/23.1:D
=1NA01+NA01-X5	38	=UACJA10GH100+UACJA10/23.2:C	**10BK**	=UACJA10GH100+UACJA10-1K42	A1	=UACJA10GH100+UACJA10/23.2:D
=1NA01+NA01-X5	62	=UACJA10GH100+UACJA10/23.3:C	**11BK**	=UACJA10GH100+UACJA10-1K43	A1	=UACJA10GH100+UACJA10/23.3:D
=1NA01+NA01-X5	42	=UACJA10GH100+UACJA10/23.4:C	**12BK**	=UACJA10GH100+UACJA10-1K44	A1	=UACJA10GH100+UACJA10/23.4:D
=1NA01+NA01-X?	?	=UACJA10GH100+UACJA10/24.5:B	**13BK**	=UACJA10GH100+UACJA10-X137	18:A	=UACJA10GH100+UACJA10/24.5:B
=1NA01+NA01-X?	?	=UACJA10GH100+UACJA10/24.5:C	**14BK**	=UACJA10GH100+UACJA10-1K55	A1	=UACJA10GH100+UACJA10/24.5:D

Cable name :	-01-1NA01+NA01-4-311	Number of conductors :	2	Description :
Cable type :	NYCY	Number of used conductors :	2	
		Cable cross section :	2.5	

External Connections			Connection color/number	Internal Connections		
To device	Pin designation	Page/column		From device	Pin designation	Page/column
=1NA01+NA01-X8	7	=UACJA10GH100+UACJA10/24.4:B	**BN**	=UACJA10GH100+UACJA10-X137	17:A	=UACJA10GH100+UACJA10/24.4:B
=1NA01+NA01-X8	25	=UACJA10GH100+UACJA10/24.4:C	**BU**	=UACJA10GH100+UACJA10-1K54	A1	=UACJA10GH100+UACJA10/24.4:D

Cable name :	-01-1NA01+NA01-4-312	Number of conductors :	19	Description :
Cable type :	NYCY	Number of used conductors :	6	
		Cable cross section :	2.5	

External Connections			Connection color/number	Internal Connections		
To device	Pin designation	Page/column		From device	Pin designation	Page/column
=1NA01+NA01-X8	7	=UACJA10GH100+UACJA10/23.7:B	**1BK**	=UACJA10GH100+UACJA10-X137	15:A	=UACJA10GH100+UACJA10/23.7:B
=1NA01+NA01-X8	10	=UACJA10GH100+UACJA10/23.7:C	**2BK**	=UACJA10GH100+UACJA10-1K47	A1	=UACJA10GH100+UACJA10/23.7:D
=1NA01+NA01-X8	14	=UACJA10GH100+UACJA10/23.8:C	**3BK**	=UACJA10GH100+UACJA10-1K48	A1	=UACJA10GH100+UACJA10/23.8:D
=1NA01+NA01-X8	18	=UACJA10GH100+UACJA10/24.1:C	**4BK**	=UACJA10GH100+UACJA10-1K51	A1	=UACJA10GH100+UACJA10/24.1:D
=1NA01+NA01-X8	22	=UACJA10GH100+UACJA10/24.2:C	**5BK**	=UACJA10GH100+UACJA10-1K52	A1	=UACJA10GH100+UACJA10/24.2:D
=1NA01+NA01-X8	26	=UACJA10GH100+UACJA10/24.3:C	**6BK**	=UACJA10GH100+UACJA10-1K53	A1	=UACJA10GH100+UACJA10/24.3:D

Cable name :	-01-1UA01+EA01-3-101	Number of conductors :	7	Description :
Cable type :	NYCY	Number of used conductors :	4	
		Cable cross section :	2.5	

External Connections			Connection color/number	Internal Connections		
To device	Pin designation	Page/column		From device	Pin designation	Page/column
=UAMKC10GH100+UAMKC11-X0	5	=UACJA10GH100+UACJA10/73.3:B	**1BK**	=UACJA10GH100+UACJA10-XT1	1:A	=UACJA10GH100+UACJA10/73.3:D
=UAMKC10GH100+UAMKC11-X0	6	=UACJA10GH100+UACJA10/73.3:B	**2BK**	=UACJA10GH100+UACJA10-XT1	2:A	=UACJA10GH100+UACJA10/73.3:D
=UAMKC10GH100+UAMKC11-X0	7	=UACJA10GH100+UACJA10/73.4:B	**3BK**	=UACJA10GH100+UACJA10-XT1	3:A	=UACJA10GH100+UACJA10/73.4:D
=UAMKC10GH100+UAMKC11-X0	8	=UACJA10GH100+UACJA10/73.5:B	**4BK**	=UACJA10GH100+UACJA10-XT1	6:A	=UACJA10GH100+UACJA10/73.5:D

CONFIDENTIAL, ALL RIGHTS RESERVED DIN 34

Format ISO/DIN A3

Approved by Contractor			Reconstruction and Modernisation of HPP Perucica - Phase II	epcg	SINTAKSA A Voith Company	Unit KA1 control cubicle circuit diagrams	DRAWING No.: PERU-01-19-170-31-001	REV No.:	= UACJA10GH100
Approved by Designer	Grga Kolić	15.6.2026.			Sintaksa - A Voith Company Ulica Domovinskog rata 104C, 21 000 Split, Hrvatska				+ UACJA10
Checked by	Antonio Aleksić	15.6.2026.				CABLE DIAGRAM	Designer No.:	SALES No.:	PAGE 139
Drawn by	Tamara Trogrlić	15.6.2026.	PROJECT NAME	EMPLOYER	DESIGNER				PAGE 139 / 156

Cable name :	-01-1UA01+EA01-7-402	Number of conductors :	19	Description :
Cable type :	NYCY	Number of used conductors :	2	
		Cable cross section :	2.5	

External Connections			Connection color/number	Internal Connections		
To device	Pin designation	Page/column		From device	Pin designation	Page/column
=UAMKC10GH100+UAMKC11-X80	60	=UACJA10GH100+UACJA10/28.8:B	**1BK**	=UACJA10GH100+UACJA10-X138	18:A	=UACJA10GH100+UACJA10/28.8:B
=UAMKC10GH100+UAMKC11-X80	?	=UACJA10GH100+UACJA10/28.8:C	**2BK**	=UACJA10GH100+UACJA10-1K98	A1	=UACJA10GH100+UACJA10/28.8:D

Cable name :	-01-1UA01+EA01-7-403	Number of conductors :	4	Description :
Cable type :	NYCY	Number of used conductors :	4	
		Cable cross section :	2.5	

External Connections			Connection color/number	Internal Connections		
To device	Pin designation	Page/column		From device	Pin designation	Page/column
=UAMKC10GH100+UAMKC11-X80	26	=UACJA10GH100+UACJA10/28.3:C	**BK**	=UACJA10GH100+UACJA10-1K93	A1	=UACJA10GH100+UACJA10/28.3:D
=UAMKC10GH100+UAMKC11-X80	23	=UACJA10GH100+UACJA10/28.4:B	**BN**	=UACJA10GH100+UACJA10-X138	14:A	=UACJA10GH100+UACJA10/28.4:B
=UAMKC10GH100+UAMKC11-X80	24	=UACJA10GH100+UACJA10/28.4:C	**BU**	=UACJA10GH100+UACJA10-1K94	A1	=UACJA10GH100+UACJA10/28.4:D
=UAMKC10GH100+UAMKC11-X80	25	=UACJA10GH100+UACJA10/28.3:B	**GY**	=UACJA10GH100+UACJA10-X138	13:A	=UACJA10GH100+UACJA10/28.3:B

Cable name :	-01-1UA01+EA01-7-404	Number of conductors :	7	Description :
Cable type :	NYCY	Number of used conductors :	6	
		Cable cross section :	2.5	

External Connections			Connection color/number	Internal Connections		
To device	Pin designation	Page/column		From device	Pin designation	Page/column
=UAMKC10GH100+UAMKC11-X80	40	=UACJA10GH100+UACJA10/28.5:B	**1BK**	=UACJA10GH100+UACJA10-X138	15:A	=UACJA10GH100+UACJA10/28.5:B
=UAMKC10GH100+UAMKC11-X80	41	=UACJA10GH100+UACJA10/28.5:C	**2BK**	=UACJA10GH100+UACJA10-1K95	A1	=UACJA10GH100+UACJA10/28.5:D
=UAMKC10GH100+UAMKC11-X80	42	=UACJA10GH100+UACJA10/28.6:B	**3BK**	=UACJA10GH100+UACJA10-X138	16:A	=UACJA10GH100+UACJA10/28.6:B
=UAMKC10GH100+UAMKC11-X80	44	=UACJA10GH100+UACJA10/28.6:C	**4BK**	=UACJA10GH100+UACJA10-1K96	A1	=UACJA10GH100+UACJA10/28.6:D
=UAMKC10GH100+UAMKC11-X80	43	=UACJA10GH100+UACJA10/28.7:B	**5BK**	=UACJA10GH100+UACJA10-X138	17:A	=UACJA10GH100+UACJA10/28.7:B
=UAMKC10GH100+UAMKC11-X80	45	=UACJA10GH100+UACJA10/28.7:C	**6BK**	=UACJA10GH100+UACJA10-1K97	A1	=UACJA10GH100+UACJA10/28.7:D

Cable name :	-01-1UA01+NE07-3-603	Number of conductors :	5	Description :
Cable type :	NYCY	Number of used conductors :	2	
		Cable cross section :	2.5	

External Connections			Connection color/number	Internal Connections		
To device	Pin designation	Page/column		From device	Pin designation	Page/column
=NE07+NE07-X1	13	=UACJA10GH100+UACJA10/77.3:B	**1BK**	=UACJA10GH100+UACJA10-XT4	4:A	=UACJA10GH100+UACJA10/77.3:B
=NE07+NE07-X1	11	=UACJA10GH100+UACJA10/77.2:B	**BN**	=UACJA10GH100+UACJA10-XT4	1:A	=UACJA10GH100+UACJA10/77.2:B

CONFIDENTIAL, ALL RIGHTS RESERVED DIN 34

Format ISO/DIN A3

Approved by Contractor			Reconstruction and Modernisation of HPP Perucica - Phase II	epcg	SINTAKSA A Voith Company	Unit KA1 control cubicle circuit diagrams	DRAWING No.: PERU-01-19-170-31-001	REV No.:	= UACJA10GH100
Approved by Designer	Grga Kolić	15.6.2026.			Sintaksa - A Voith Company Ulica Domovinskog rata 104C, 21 000 Split, Hrvatska				+ UACJA10
Checked by	Antonio Aleksić	15.6.2026.				CABLE DIAGRAM	Designer No.:	SALES No.:	PAGE 140
Drawn by	Tamara Trogrlić	15.6.2026.	PROJECT NAME	EMPLOYER	DESIGNER				PAGE 140 / 156

Cable name :	-01-1UA01+NE07-4-103	Number of conductors :	7	Description :
Cable type :	NYCY	Number of used conductors :	3	
		Cable cross section :	2.5	

External Connections			Connection color/number	Internal Connections		
To device	Pin designation	Page/column		From device	Pin designation	Page/column
=NE07+NE07-X2	54	=UACJA10GH100+UACJA10/25.4:C	1BK	=UACJA10GH100+UACJA10-1K64	A1	=UACJA10GH100+UACJA10/25.4:D
=NE07+NE07-X2	53	=UACJA10GH100+UACJA10/25.4:B	2BK	=UACJA10GH100+UACJA10-X14	5:A	=UACJA10GH100+UACJA10/25.4:B
=NE07+NE07-X2	55	=UACJA10GH100+UACJA10/25.5:C	3BK	=UACJA10GH100+UACJA10-1K65	A1	=UACJA10GH100+UACJA10/25.5:D

Cable name :	-01-1UA01+NE08-3-601	Number of conductors :	5	Description :
Cable type :	NYCY	Number of used conductors :	4	
		Cable cross section :	2.5	

External Connections			Connection color/number	Internal Connections		
To device	Pin designation	Page/column		From device	Pin designation	Page/column
=NE08+NE08-X1	13	=UACJA10GH100+UACJA10/74.3:B	1BK	=UACJA10GH100+UACJA10-XT2	7:A	=UACJA10GH100+UACJA10/74.3:B
=NE08+NE08-X1	11	=UACJA10GH100+UACJA10/74.2:B	BN	=UACJA10GH100+UACJA10-XT2	1:A	=UACJA10GH100+UACJA10/74.2:B
=NE08+NE08-X1	17	=UACJA10GH100+UACJA10/74.5:B	BU	=UACJA10GH100+UACJA10-XT2	16:A	=UACJA10GH100+UACJA10/74.5:B
=NE08+NE08-X1	15	=UACJA10GH100+UACJA10/74.4:B	GY	=UACJA10GH100+UACJA10-XT2	12:A	=UACJA10GH100+UACJA10/74.4:B

Cable name :	-01-1UA01+NE08-4-101	Number of conductors :	12	Description :
Cable type :	NYCY	Number of used conductors :	9	
		Cable cross section :	2.5	

External Connections			Connection color/number	Internal Connections		
To device	Pin designation	Page/column		From device	Pin designation	Page/column
=NE08+NE08-X2	39	=UACJA10GH100+UACJA10/24.8:C	1BK	=UACJA10GH100+UACJA10-1K58	A1	=UACJA10GH100+UACJA10/24.8:D
=NE08+NE08-X2	40	=UACJA10GH100+UACJA10/25.1:C	3BK	=UACJA10GH100+UACJA10-1K61	A1	=UACJA10GH100+UACJA10/25.1:D
=NE08+NE08-X2	20	=UACJA10GH100+UACJA10/25.6:B	4BK	=UACJA10GH100+UACJA10-X14	6:A	=UACJA10GH100+UACJA10/25.6:B
=NE08+NE08-X2	46	=UACJA10GH100+UACJA10/25.2:C	5BK	=UACJA10GH100+UACJA10-1K62	A1	=UACJA10GH100+UACJA10/25.2:D
=NE08+NE08-X2	33	=UACJA10GH100+UACJA10/25.2:B	6BK	=UACJA10GH100+UACJA10-X14	3:A	=UACJA10GH100+UACJA10/25.2:B
=NE08+NE08-X2	48	=UACJA10GH100+UACJA10/25.3:C	7BK	=UACJA10GH100+UACJA10-1K63	A1	=UACJA10GH100+UACJA10/25.3:D
=NE08+NE08-X2	34	=UACJA10GH100+UACJA10/25.3:B	8BK	=UACJA10GH100+UACJA10-X14	4:A	=UACJA10GH100+UACJA10/25.3:B
=NE08+NE08-X2	37	=UACJA10GH100+UACJA10/25.6:C	9BK	=UACJA10GH100+UACJA10-1K66	A1	=UACJA10GH100+UACJA10/25.6:D
=NE08+NE08-X2	38	=UACJA10GH100+UACJA10/25.7:C	10BK	=UACJA10GH100+UACJA10-1K67	A1	=UACJA10GH100+UACJA10/25.7:D

Cable name :	-01-1UA01+NE09-3-602	Number of conductors :	5	Description :
Cable type :	NYCY	Number of used conductors :	4	
		Cable cross section :	2.5	

External Connections			Connection color/number	Internal Connections		
To device	Pin designation	Page/column		From device	Pin designation	Page/column
=NE09+NE09-X2	67	=UACJA10GH100+UACJA10/76.3:B	1BK	=UACJA10GH100+UACJA10-XT3	5:A	=UACJA10GH100+UACJA10/76.3:B
=NE09+NE09-X2	66	=UACJA10GH100+UACJA10/76.2:B	BN	=UACJA10GH100+UACJA10-XT3	1:A	=UACJA10GH100+UACJA10/76.2:B
=NE09+NE09-X2	69	=UACJA10GH100+UACJA10/76.4:B	BU	=UACJA10GH100+UACJA10-XT3	11:A	=UACJA10GH100+UACJA10/76.4:B
=NE09+NE09-X2	68	=UACJA10GH100+UACJA10/76.4:B	GY	=UACJA10GH100+UACJA10-XT3	9:A	=UACJA10GH100+UACJA10/76.4:B

CONFIDENTIAL, ALL RIGHTS RESERVED DIN 34

Format ISO/DIN A3

Approved by Contractor			Reconstruction and Modernisation of HPP Perucica - Phase II	epcg	SINTAKSA A Voith Company Sintaksa - A Voith Company Ulica Domovinskog rata 104C, 21 000 Split, Hrvatska	Unit KA1 control cubicle circuit diagrams	DRAWING No.: PERU-01-19-170-31-001	REV No.:	= UACJA10GH100
Approved by Designer	Grga Kolić	15.6.2026.							+ UACJA10
Checked by	Antonio Aleksić	15.6.2026.				CABLE DIAGRAM	Designer No.:	SALES No.:	PAGE 141
Drawn by	Tamara Trogrlić	15.6.2026.	PROJECT NAME	EMPLOYER	DESIGNER				PAGE 141 / 156

Cable name :	-01-1UA01+UN03-4-017	Number of conductors :	10	Description :
Cable type :	NYCY	Number of used conductors :	2	
		Cable cross section :	1.5	

External Connections			Connection color/number	Internal Connections		
To device	Pin designation	Page/column		From device	Pin designation	Page/column
			1			
			2			
			3			
=UACHA10GH100+UACHA10-X141	6	=UACJA10GH100+UACJA10/66.3:E	4	=UACJA10GH100+UACJA10-X73	3:A	=UACJA10GH100+UACJA10/66.3:D
			5			
			6			
			7			
=UACHA10GH100+UACHA10-X141	15	=UACJA10GH100+UACJA10/66.4:E	8	=UACJA10GH100+UACJA10-X73	4:A	=UACJA10GH100+UACJA10/66.4:D
			9			
			10			

Cable name :	-01-1UA01+UN04-3-701	Number of conductors :		Description :
Cable type :		Number of used conductors :	4	
		Cable cross section :		

External Connections			Connection color/number	Internal Connections		
To device	Pin designation	Page/column		From device	Pin designation	Page/column
=UAMKC10GH100+UAMKC11-X0	10	=UACJA10GH100+UACJA10/75.3:E	1BK	=UACJA10GH100+UACJA10-XT2	3:B	=UACJA10GH100+UACJA10/74.2:B
=UAMKC10GH100+UAMKC11-X0	11	=UACJA10GH100+UACJA10/75.3:E	2BK	=UACJA10GH100+UACJA10-XT2	8:B	=UACJA10GH100+UACJA10/74.3:B
=UAMKC10GH100+UAMKC11-X0	12	=UACJA10GH100+UACJA10/75.3:E	3BK	=UACJA10GH100+UACJA10-XT2	13:B	=UACJA10GH100+UACJA10/74.4:B
=UAMKC10GH100+UAMKC11-X0	?	=UACJA10GH100+UACJA10/75.4:E	4BK	=UACJA10GH100+UACJA10-XT2	17:B	=UACJA10GH100+UACJA10/74.5:B

Cable name :	-01-1UA01+UN04-4-106	Number of conductors :	10	Description :
Cable type :	NYCY	Number of used conductors :	8	
		Cable cross section :	2.5	

External Connections			Connection color/number	Internal Connections		
To device	Pin designation	Page/column		From device	Pin designation	Page/column
=NE08+NE08-X2	60	=UACJA10GH100+UACJA10/54.3:D	1BK	=UACJA10GH100+UACJA10-X71	7:A	=UACJA10GH100+UACJA10/54.3:E
=NE08+NE08-X2	4	=UACJA10GH100+UACJA10/54.3:D	2BK	=UACJA10GH100+UACJA10-X71	8:A	=UACJA10GH100+UACJA10/54.3:E
=NE08+NE08-X2	14	=UACJA10GH100+UACJA10/54.2:C	3BK	=UACJA10GH100+UACJA10-X71	1:A	=UACJA10GH100+UACJA10/54.2:C
=NE08+NE08-X2	9,10	=UACJA10GH100+UACJA10/54.3:C	4BK	=UACJA10GH100+UACJA10-X71	5:A	=UACJA10GH100+UACJA10/54.3:C
=NE08+NE08-X2	7,8	=UACJA10GH100+UACJA10/54.2:C	5BK	=UACJA10GH100+UACJA10-X71	3:A	=UACJA10GH100+UACJA10/54.2:C
=NE08+NE08-X2	11,12	=UACJA10GH100+UACJA10/54.2:D	7BK	=UACJA10GH100+UACJA10-X71	2:A	=UACJA10GH100+UACJA10/54.2:E
=NE08+NE08-X2	60,61	=UACJA10GH100+UACJA10/54.2:D	8BK	=UACJA10GH100+UACJA10-X71	4:A	=UACJA10GH100+UACJA10/54.2:E
=NE08+NE08-X2	1	=UACJA10GH100+UACJA10/54.4:C	OG	=UACJA10GH100+UACJA10-K304	62	=UACJA10GH100+UACJA10/54.4:B

CONFIDENTIAL, ALL RIGHTS RESERVED DIN 34

Format ISO/DIN A3

Approved by Contractor			Reconstruction and Modernisation of HPP Perucica - Phase II	epcg	SINTAKSA A Voith Company, Sintaksa - A Voith Company, Ulica Domovinskog rata 104C, 21 000 Split, Hrvatska	Unit KA1 control cubicle circuit diagrams	DRAWING No.: PERU-01-19-170-31-001	REV No.:	= UACJA10GH100
Approved by Designer	Grga Kolić	15.6.2026.							+ UACJA10
Checked by	Antonio Aleksić	15.6.2026.				CABLE DIAGRAM	Designer No.:	SALES No.:	PAGE 142
Drawn by	Tamara Trogrlić	15.6.2026.	PROJECT NAME	EMPLOYER	DESIGNER				PAGE 142 / 156

Cable name :	-01-1UA01+UN04-7-106	Number of conductors :	7	Description :
Cable type :	NYCY	Number of used conductors :	5	
		Cable cross section :	2.5	

External Connections			Connection color/number	Internal Connections		
To device	Pin designation	Page/column		From device	Pin designation	Page/column
=0UA01+UV01-X10	1	=UACJA10GH100+UACJA10/67.2:E	1BK	=UACJA10GH100+UACJA10-X139	14:A	=UACJA10GH100+UACJA10/67.2:A
=0UA01+UV01-X10	5	=UACJA10GH100+UACJA10/67.2:E	2BK	=UACJA10GH100+UACJA10-X139	16:A	=UACJA10GH100+UACJA10/67.2:D
=0UA01+UV01-X10	8	=UACJA10GH100+UACJA10/67.3:E	3BK	=UACJA10GH100+UACJA10-X139	17:A	=UACJA10GH100+UACJA10/67.3:D
=0UA01+UV01-X10	11	=UACJA10GH100+UACJA10/67.4:E	4BK	=UACJA10GH100+UACJA10-X139	18:A	=UACJA10GH100+UACJA10/67.4:D
=0UA01+UV01-X10	14	=UACJA10GH100+UACJA10/67.5:E	5BK	=UACJA10GH100+UACJA10-X139	19:A	=UACJA10GH100+UACJA10/67.5:D

Cable name :	-01-1UA01+UN04-7-401	Number of conductors :	19	Description :
Cable type :	NYCY	Number of used conductors :	8	
		Cable cross section :	2.5	

External Connections			Connection color/number	Internal Connections		
To device	Pin designation	Page/column		From device	Pin designation	Page/column
=UAMKC10GH100+UAMKC11-X80	61	=UACJA10GH100+UACJA10/65.1:E	1BK	=UACJA10GH100+UACJA10-X72	7:A	=UACJA10GH100+UACJA10/65.1:D
=UAMKC10GH100+UAMKC11-K701		=UACJA10GH100+UACJA10/65.3:E	2BK	=UACJA10GH100+UACJA10-X72	9:A	=UACJA10GH100+UACJA10/65.3:D
=UAMKC10GH100+UAMKC11-K700		=UACJA10GH100+UACJA10/65.2:E	3BK	=UACJA10GH100+UACJA10-X72	8:A	=UACJA10GH100+UACJA10/65.2:D
=UAMKC10GH100+UAMKC11-K707		=UACJA10GH100+UACJA10/65.4:E	4BK	=UACJA10GH100+UACJA10-X72	10:A	=UACJA10GH100+UACJA10/65.4:D
=UAMKC10GH100+UAMKC11-K712		=UACJA10GH100+UACJA10/65.5:E	5BK	=UACJA10GH100+UACJA10-X72	11:A	=UACJA10GH100+UACJA10/65.5:D
=UAMKC10GH100+UAMKC11-K713		=UACJA10GH100+UACJA10/63.2:E	6BK	=UACJA10GH100+UACJA10-X72	3:A	=UACJA10GH100+UACJA10/63.2:D
=UAMKC10GH100+UAMKC11-K714		=UACJA10GH100+UACJA10/63.3:E	7BK	=UACJA10GH100+UACJA10-X72	5:A	=UACJA10GH100+UACJA10/63.3:E
=UAMKC10GH100+UAMKC11-K717		=UACJA10GH100+UACJA10/65.6:E	8BK	=UACJA10GH100+UACJA10-X72	12:A	=UACJA10GH100+UACJA10/65.6:D

Cable name :	-01-1UA01+UN12-4-003	Number of conductors :	5	Description :
Cable type :	NYCY	Number of used conductors :	2	
		Cable cross section :	2.5	

External Connections			Connection color/number	Internal Connections		
To device	Pin designation	Page/column		From device	Pin designation	Page/column
=UACHA10GH100+UACHA10-X153	5	=UACJA10GH100+UACJA10/58.2:C	BU	=UACJA10GH100+UACJA10-X14	19:A	=UACJA10GH100+UACJA10/58.2:C
			GY			
			BN			
=UACHA10GH100+UACHA10-X153	1	=UACJA10GH100+UACJA10/58.2:B	1BK	=UACJA10GH100+UACJA10-X14	10:A	=UACJA10GH100+UACJA10/58.2:A
			2BK			

Cable name :	-01-1UA01+UN12-4-011	Number of conductors :	10	Description :
Cable type :	NYCY	Number of used conductors :	4	
		Cable cross section :	1.5	

External Connections			Connection color/number	Internal Connections		
To device	Pin designation	Page/column		From device	Pin designation	Page/column
=UACHA10GH100+UACHA10-X161	4	=UACJA10GH100+UACJA10/27.4:B	1	=UACJA10GH100+UACJA10-X138	9:A	=UACJA10GH100+UACJA10/27.4:B
=UACHA10GH100+UACHA10-X161	5	=UACJA10GH100+UACJA10/27.4:C	2	=UACJA10GH100+UACJA10-1K84	A1	=UACJA10GH100+UACJA10/27.4:D
			3			
			4			
			5			

CONFIDENTIAL, ALL RIGHTS RESERVED DIN 34

Format ISO/DIN A3

Approved by Contractor			Reconstruction and Modernisation of HPP Perucica - Phase II	epcg	SINTAKSA A Voith Company	Unit KA1 control cubicle circuit diagrams	DRAWING No.:	REV No.:	= UACJA10GH100
Approved by Designer	Grga Kolić	15.6.2026.					PERU-01-19-170-31-001		+ UACJA10
Checked by	Antonio Aleksić	15.6.2026.			Sintaksa - A Voith Company Ulica Domovinskog rata 104C, 21 000 Split, Hrvatska	CABLE DIAGRAM	Designer No.:	SALES No.:	PAGE 143
Drawn by	Tamara Trogrlić	15.6.2026.	PROJECT NAME	EMPLOYER	DESIGNER				PAGE 143 / 156

Cable name :	-01-1UA01+UN12-4-011	Number of conductors :	10	Description :
Cable type :	NYCY	Number of used conductors :	4	
		Cable cross section :	1.5	

External Connections			Connection color/number	Internal Connections		
To device	Pin designation	Page/column		From device	Pin designation	Page/column
			6			
=UACHA10GH100+UACHA10-X161	10	=UACJA10GH100+UACJA10/26.8:B	7	=UACJA10GH100+UACJA10-X138	5:A	=UACJA10GH100+UACJA10/26.8:B
=UACHA10GH100+UACHA10-X161	11	=UACJA10GH100+UACJA10/26.8:C	8	=UACJA10GH100+UACJA10-1K78	A1	=UACJA10GH100+UACJA10/26.8:D
			9			
			10			

Cable name :	-01-1UA01+UN12-4-012	Number of conductors :	10	Description :
Cable type :	NYCY	Number of used conductors :	8	
		Cable cross section :	1.5	

External Connections			Connection color/number	Internal Connections		
To device	Pin designation	Page/column		From device	Pin designation	Page/column
=UACHA10GH100+UACHA10-X161	12	=UACJA10GH100+UACJA10/27.1:B	1	=UACJA10GH100+UACJA10-X138	6:A	=UACJA10GH100+UACJA10/27.1:B
=UACHA10GH100+UACHA10-X161	13	=UACJA10GH100+UACJA10/27.1:C	2	=UACJA10GH100+UACJA10-1K81	A1	=UACJA10GH100+UACJA10/27.1:D
=UACHA10GH100+UACHA10-X161	14	=UACJA10GH100+UACJA10/27.2:B	3	=UACJA10GH100+UACJA10-X138	7:A	=UACJA10GH100+UACJA10/27.2:B
=UACHA10GH100+UACHA10-X161	15	=UACJA10GH100+UACJA10/27.2:C	4	=UACJA10GH100+UACJA10-1K82	A1	=UACJA10GH100+UACJA10/27.2:D
=UACHA10GH100+UACHA10-X161	16	=UACJA10GH100+UACJA10/27.3:B	5	=UACJA10GH100+UACJA10-X138	8:A	=UACJA10GH100+UACJA10/27.3:B
=UACHA10GH100+UACHA10-X161	17	=UACJA10GH100+UACJA10/27.3:C	6	=UACJA10GH100+UACJA10-1K83	A1	=UACJA10GH100+UACJA10/27.3:D
=UACHA10GH100+UACHA10-X161	47	=UACJA10GH100+UACJA10/26.6:C	7	=UACJA10GH100+UACJA10-1K76	A1	=UACJA10GH100+UACJA10/26.6:D
=UACHA10GH100+UACHA10-X161	46	=UACJA10GH100+UACJA10/26.6:B	8	=UACJA10GH100+UACJA10-X138	3:A	=UACJA10GH100+UACJA10/26.6:B
			9			
			10			

Cable name :	-01-1UA01+UN12-4-013	Number of conductors :	10	Description :
Cable type :	NYCY	Number of used conductors :	8	
		Cable cross section :	1.5	

External Connections			Connection color/number	Internal Connections		
To device	Pin designation	Page/column		From device	Pin designation	Page/column
=UACHA10GH100+UACHA10-X161	28	=UACJA10GH100+UACJA10/69.7:B	1	=UACJA10GH100+UACJA10-X144	5:A	=UACJA10GH100+UACJA10/69.7:B
=UACHA10GH100+UACHA10-X161	24	=UACJA10GH100+UACJA10/70.2:C	2	=UACJA10GH100+UACJA10-X144	16:A	=UACJA10GH100+UACJA10/70.2:C
=UACHA10GH100+UACHA10-X161	25	=UACJA10GH100+UACJA10/70.2:C	3	=UACJA10GH100+UACJA10-X144	17:A	=UACJA10GH100+UACJA10/70.2:C
=UACHA10GH100+UACHA10-X161	26	=UACJA10GH100+UACJA10/70.3:C	4	=UACJA10GH100+UACJA10-X144	18:A	=UACJA10GH100+UACJA10/70.3:C
=UACHA10GH100+UACHA10-X161	27	=UACJA10GH100+UACJA10/70.4:C	5	=UACJA10GH100+UACJA10-X144	19:A	=UACJA10GH100+UACJA10/70.4:C
=UACHA10GH100+UACHA10-X161	54	=UACJA10GH100+UACJA10/70.5:C	6	=UACJA10GH100+UACJA10-X144	20:A	=UACJA10GH100+UACJA10/70.5:C
=UACHA10GH100+UACHA10-X161	55	=UACJA10GH100+UACJA10/70.6:C	7	=UACJA10GH100+UACJA10-X144	21:A	=UACJA10GH100+UACJA10/70.6:C
=UACHA10GH100+UACHA10-X161	56	=UACJA10GH100+UACJA10/69.7:C	8	=UACJA10GH100+UACJA10-X144	15:A	=UACJA10GH100+UACJA10/69.7:C
			9			
			10			

CONFIDENTIAL, ALL RIGHTS RESERVED DIN 34

Format ISO/DIN A3

Approved by Contractor			Reconstruction and Modernisation of HPP Perucica - Phase II	epcg	SINTAKSA A Voith Company	Unit KA1 control cubicle circuit diagrams	DRAWING No.: PERU-01-19-170-31-001	REV No.:	= UACJA10GH100
Approved by Designer	Grga Kolić	15.6.2026.			Sintaksa - A Voith Company, Ulica Domovinskog rata 104C, 21 000 Split, Hrvatska				+ UACJA10
Checked by	Antonio Aleksić	15.6.2026.				CABLE DIAGRAM	Designer No.:	SALES No.:	PAGE 144
Drawn by	Tamara Trogrlić	15.6.2026.	PROJECT NAME	EMPLOYER	DESIGNER				PAGE 144 / 156

Cable name :	-01-1UA01+UN12-4-014	**Number of conductors :**	10
Cable type :	NYCY	**Number of used conductors :**	4
		Cable cross section :	1.5
		Description :	

External Connections			Connection color/number	Internal Connections		
To device	Pin designation	Page/column		From device	Pin designation	Page/column
=UACHA10GH100+UACHA10-X161	32	=UACJA10GH100+UACJA10/27.5:C	1	=UACJA10GH100+UACJA10-1K85	A1	=UACJA10GH100+UACJA10/27.5:D
=UACHA10GH100+UACHA10-X161	33	=UACJA10GH100+UACJA10/26.5:C	2	=UACJA10GH100+UACJA10-1K75	A1	=UACJA10GH100+UACJA10/26.5:D
			3			
			4			
			5			
			6			
=UACHA10GH100+UACHA10-X161	39	=UACJA10GH100+UACJA10/27.5:B	7	=UACJA10GH100+UACJA10-X138	10:A	=UACJA10GH100+UACJA10/27.5:B
=UACHA10GH100+UACHA10-X161	40	=UACJA10GH100+UACJA10/26.5:B	8	=UACJA10GH100+UACJA10-X138	2:A	=UACJA10GH100+UACJA10/26.5:B
			9			
			10			

Cable name :	-01-1UA01+UN12-4-015	**Number of conductors :**	10
Cable type :	NYCY	**Number of used conductors :**	2
		Cable cross section :	1.5
		Description :	

External Connections			Connection color/number	Internal Connections		
To device	Pin designation	Page/column		From device	Pin designation	Page/column
=UACHA10GH100+UACHA10-X161	38	=UACJA10GH100+UACJA10/26.7:C	1	=UACJA10GH100+UACJA10-1K77	A1	=UACJA10GH100+UACJA10/26.7:D
=UACHA10GH100+UACHA10-X161	45	=UACJA10GH100+UACJA10/26.7:B	2	=UACJA10GH100+UACJA10-X138	4:A	=UACJA10GH100+UACJA10/26.7:B
			3			
			4			
			5			
			6			
			7			
			8			
			9			
			10			

Cable name :	-01-1UA01+UN12-4-016	**Number of conductors :**	10
Cable type :	NYCY	**Number of used conductors :**	6
		Cable cross section :	1.5
		Description :	

External Connections			Connection color/number	Internal Connections		
To device	Pin designation	Page/column		From device	Pin designation	Page/column
=UACHA10GH100+UACHA10-X141	8	=UACJA10GH100+UACJA10/66.1:E	1	=UACJA10GH100+UACJA10-X73	1:A	=UACJA10GH100+UACJA10/66.1:D
			2			
=UACHA10GH100+UACHA10-X141	17	=UACJA10GH100+UACJA10/66.2:E	3	=UACJA10GH100+UACJA10-X73	2:A	=UACJA10GH100+UACJA10/66.2:D
			4			
=UACJA10GH100+UACJA10-X73	5:A	=UACJA10GH100+UACJA10/66.5:D	5	=UACHA10GH100+UACHA10-X141	21	=UACJA10GH100+UACJA10/66.5:E
=UACJA10GH100+UACJA10-X73	6:A	=UACJA10GH100+UACJA10/66.6:D	6	=UACHA10GH100+UACHA10-X141	27	=UACJA10GH100+UACJA10/66.6:E
=UACHA10GH100+UACHA10-X152	2	=UACJA10GH100+UACJA10/55.4:E	7	=UACJA10GH100+UACJA10-X72	1:A	=UACJA10GH100+UACJA10/55.4:E
			8			
=UACHA10GH100+UACHA10-X152	6	=UACJA10GH100+UACJA10/55.5:E	9	=UACJA10GH100+UACJA10-X72	2:A	=UACJA10GH100+UACJA10/55.5:E

CONFIDENTIAL, ALL RIGHTS RESERVED DIN 34

Format ISO/DIN A3

Approved by Contractor			Reconstruction and Modernisation of HPP Perucica - Phase II	epcg	SINTAKSA A Voith Company	Unit KA1 control cubicle circuit diagrams	DRAWING No.: PERU-01-19-170-31-001	REV No.:	= UACJA10GH100
Approved by Designer	Grga Kolić	15.6.2026.			Sintaksa - A Voith Company Ulica Domovinskog rata 104C, 21 000 Split, Hrvatska				+ UACJA10
Checked by	Antonio Aleksić	15.6.2026.				CABLE DIAGRAM	Designer No.:	SALES No.:	PAGE 145
Drawn by	Tamara Trogrlić	15.6.2026.	PROJECT NAME	EMPLOYER	DESIGNER				PAGE 145 / 156

Cable name :	-01-1UA01+UN12-4-016	Number of conductors :	10	Description :
Cable type :	NYCY	Number of used conductors :	6	
		Cable cross section :	1.5	

External Connections			Connection color/number	Internal Connections		
To device	Pin designation	Page/column		From device	Pin designation	Page/column
			10			

Cable name :	-TI1?	Number of conductors :		Description :
Cable type :		Number of used conductors :	3	
		Cable cross section :		

External Connections			Connection color/number	Internal Connections		
To device	Pin designation	Page/column		From device	Pin designation	Page/column
=KZK1+KZK1-TI1	2	=UACJA10GH100+UACJA10/33.4:C	BN	=UACJA10GH100+UACJA10-1K144	A1	=UACJA10GH100+UACJA10/33.4:D
=KZK1+KZK1-TI1	3	=UACJA10GH100+UACJA10/33.4:C	GN	=UACJA10GH100+UACJA10-1K145	A1	=UACJA10GH100+UACJA10/33.5:D
=KZK1+KZK1-TI1	1	=UACJA10GH100+UACJA10/33.4:B	WH	=UACJA10GH100+UACJA10-X141	14:A	=UACJA10GH100+UACJA10/33.4:B

Cable name :	-TI2?	Number of conductors :		Description :
Cable type :		Number of used conductors :	3	
		Cable cross section :		

External Connections			Connection color/number	Internal Connections		
To device	Pin designation	Page/column		From device	Pin designation	Page/column
=KZK1+KZK1-TI2	2	=UACJA10GH100+UACJA10/33.6:C	BN	=UACJA10GH100+UACJA10-1K146	A1	=UACJA10GH100+UACJA10/33.6:D
=KZK1+KZK1-TI2	3	=UACJA10GH100+UACJA10/33.6:C	GN	=UACJA10GH100+UACJA10-1K147	A1	=UACJA10GH100+UACJA10/33.7:D
=KZK1+KZK1-TI2	1	=UACJA10GH100+UACJA10/33.6:B	WH	=UACJA10GH100+UACJA10-X141	15:A	=UACJA10GH100+UACJA10/33.6:B

Cable name :	-TI3?	Number of conductors :		Description :
Cable type :		Number of used conductors :	3	
		Cable cross section :		

External Connections			Connection color/number	Internal Connections		
To device	Pin designation	Page/column		From device	Pin designation	Page/column
=KZK1+KZK1-TI3	2	=UACJA10GH100+UACJA10/32.8:C	BN	=UACJA10GH100+UACJA10-1K138	A1	=UACJA10GH100+UACJA10/32.8:D
=KZK1+KZK1-TI3	3	=UACJA10GH100+UACJA10/32.8:C	GN	=UACJA10GH100+UACJA10-1K141	A1	=UACJA10GH100+UACJA10/33.1:D
=KZK1+KZK1-TI3	1	=UACJA10GH100+UACJA10/32.8:B	WH	=UACJA10GH100+UACJA10-X141	11:A	=UACJA10GH100+UACJA10/32.8:B

Cable name :	-TI4?	Number of conductors :		Description :
Cable type :		Number of used conductors :	3	
		Cable cross section :		

External Connections			Connection color/number	Internal Connections		
To device	Pin designation	Page/column		From device	Pin designation	Page/column
=KZK1+KZK1-TI4	2	=UACJA10GH100+UACJA10/33.2:C	BN	=UACJA10GH100+UACJA10-1K142	A1	=UACJA10GH100+UACJA10/33.2:D
=KZK1+KZK1-TI4	3	=UACJA10GH100+UACJA10/33.2:C	GN	=UACJA10GH100+UACJA10-1K143	A1	=UACJA10GH100+UACJA10/33.3:D
=KZK1+KZK1-TI4	1	=UACJA10GH100+UACJA10/33.2:B	WH	=UACJA10GH100+UACJA10-X141	13:A	=UACJA10GH100+UACJA10/33.2:B

CONFIDENTIAL, ALL RIGHTS RESERVED DIN 34

Format ISO/DIN A3

Approved by Contractor			Reconstruction and Modernisation of HPP Perucica - Phase II	epcg	SINTAKSA A Voith Company, Sintaksa - A Voith Company, Ulica Domovinskog rata 104C, 21 000 Split, Hrvatska	Unit KA1 control cubicle circuit diagrams	DRAWING No.: PERU-01-19-170-31-001	REV No.:	= UACJA10GH100
Approved by Designer	Grga Kolić	15.6.2026.							+ UACJA10
Checked by	Antonio Aleksić	15.6.2026.				CABLE DIAGRAM	Designer No.:	SALES No.:	PAGE 146
Drawn by	Tamara Trogrlić	15.6.2026.	PROJECT NAME	EMPLOYER	DESIGNER				PAGE 146 / 156

Cable name :	-UACJA10-W8001	Number of conductors :		Description :
Cable type :	ETHERLINE Y CAT5 2X2XAWG22	Number of used conductors :	1	
		Cable cross section :		

External Connections			Connection color/number	Internal Connections		
To device	Pin designation	Page/column		From device	Pin designation	Page/column
=0UA01+UV01-U?		=UACJA10GH100+UACJA10/78.2:E	IE	=UACJA10GH100+UACJA10-U300	P2	=UACJA10GH100+UACJA10/78.3:C

Cable name :	-UACJA10-W8002	Number of conductors :		Description :
Cable type :	ETHERLINE Y CAT5 2X2XAWG22	Number of used conductors :	1	
		Cable cross section :		

External Connections			Connection color/number	Internal Connections		
To device	Pin designation	Page/column		From device	Pin designation	Page/column
=UAMKC10GH100+UAMKC11-U?		=UACJA10GH100+UACJA10/78.4:E	IE	=UACJA10GH100+UACJA10-U300	P5	=UACJA10GH100+UACJA10/78.3:B

Cable name :	-UACJA10-W8003	Number of conductors :		Description :
Cable type :	ETHERLINE Y CAT5 2X2XAWG22	Number of used conductors :	1	
		Cable cross section :		

External Connections			Connection color/number	Internal Connections		
To device	Pin designation	Page/column		From device	Pin designation	Page/column
=UAMKC10GH100+UAMKC11-U?		=UACJA10GH100+UACJA10/78.5:E	IE	=UACJA10GH100+UACJA10-U301	P2	=UACJA10GH100+UACJA10/78.5:C

Cable name :	-UACJA10-W8004	Number of conductors :		Description :
Cable type :	ETHERLINE Y CAT5 2X2XAWG22	Number of used conductors :	1	
		Cable cross section :		

External Connections			Connection color/number	Internal Connections		
To device	Pin designation	Page/column		From device	Pin designation	Page/column
			IE			
=0UA01+UV01-U?		=UACJA10GH100+UACJA10/78.7:E		=UACJA10GH100+UACJA10-U301	P5	=UACJA10GH100+UACJA10/78.5:B

Cable name :	-UACJA10-W8005	Number of conductors :		Description :
Cable type :	ETHERLINE Y CAT5 2X2XAWG22	Number of used conductors :	1	
		Cable cross section :		

External Connections			Connection color/number	Internal Connections		
To device	Pin designation	Page/column		From device	Pin designation	Page/column
			IE			
=AUMA+K1:C1:V1-U?		=UACJA10GH100+UACJA10/79.5:E		=UACJA10GH100+UACJA10-A350	X1P2:LAN	=UACJA10GH100+UACJA10/79.4:E

CONFIDENTIAL, ALL RIGHTS RESERVED DIN 34

Format ISO/DIN A3

Approved by Contractor			Reconstruction and Modernisation of HPP Perucica - Phase II	epcg	SINTAKSA A Voith Company	Unit KA1 control cubicle circuit diagrams	DRAWING No.:	REV No.:	= UACJA10GH100
Approved by Designer	Grga Kolić	15.6.2026.			Sintaksa - A Voith Company Ulica Domovinskog rata 104C, 21 000 Split, Hrvatska		PERU-01-19-170-31-001		+ UACJA10
Checked by	Antonio Aleksić	15.6.2026.				CABLE DIAGRAM	Designer No.:	SALES No.:	PAGE 147
Drawn by	Tamara Trogrlić	15.6.2026.	PROJECT NAME	EMPLOYER	DESIGNER				PAGE 147 / 156

Cable name :	-UACJA10-W8006	Number of conductors :		Description :
Cable type :	ETHERLINE Y CAT5 2X2XAWG22	Number of used conductors :	1	
		Cable cross section :		

External Connections			Connection color/number	Internal Connections		
To device	Pin designation	Page/column		From device	Pin designation	Page/column
			IE			
=AUMA+K1:C2:V2-U?		=UACJA10GH100+UACJA10/79.7:E	IE CABLE	=UACJA10GH100+UACJA10-A102	P2 R	=UACJA10GH100+UACJA10/12.3:E

Cable name :	-WK1001	Number of conductors :	4	Description :
Cable type :	NYY	Number of used conductors :	2	
		Cable cross section :	2.5	

External Connections			Connection color/number	Internal Connections		
To device	Pin designation	Page/column		From device	Pin designation	Page/column
=KZK1+KZK1-X1	1	=UACJA10GH100+UACJA10/10.7:E	BK	=UACJA10GH100+UACJA10-X141	1:A	=UACJA10GH100+UACJA10/10.7:D
=KZK1+KZK1-X1	14	=UACJA10GH100+UACJA10/10.7:E	BU	=UACJA10GH100+UACJA10-X141	19:A	=UACJA10GH100+UACJA10/10.7:D

Cable name :	-WK1002	Number of conductors :	12	Description :
Cable type :	LiYCY	Number of used conductors :	12	
		Cable cross section :	0.75	

External Connections			Connection color/number	Internal Connections		
To device	Pin designation	Page/column		From device	Pin designation	Page/column
=KZK1+KZK1-X1	30	=UACJA10GH100+UACJA10/31.8:C	WH	=UACJA10GH100+UACJA10-1K128	A1	=UACJA10GH100+UACJA10/31.8:D
=KZK1+KZK1-X1	29	=UACJA10GH100+UACJA10/31.7:C	BN	=UACJA10GH100+UACJA10-1K127	A1	=UACJA10GH100+UACJA10/31.7:D
=KZK1+KZK1-X1	28	=UACJA10GH100+UACJA10/31.6:C	GN	=UACJA10GH100+UACJA10-1K126	A1	=UACJA10GH100+UACJA10/31.6:D
=KZK1+KZK1-X1	27	=UACJA10GH100+UACJA10/31.3:C	YE	=UACJA10GH100+UACJA10-1K123	A1	=UACJA10GH100+UACJA10/31.3:D
=KZK1+KZK1-X1	35	=UACJA10GH100+UACJA10/32.5:C	GY	=UACJA10GH100+UACJA10-1K135	A1	=UACJA10GH100+UACJA10/32.5:D
=KZK1+KZK1-X1	33	=UACJA10GH100+UACJA10/32.3:C	PK	=UACJA10GH100+UACJA10-1K133	A1	=UACJA10GH100+UACJA10/32.3:D
=KZK1+KZK1-X1	26	=UACJA10GH100+UACJA10/31.2:C	BU	=UACJA10GH100+UACJA10-1K122	A1	=UACJA10GH100+UACJA10/31.2:D
=KZK1+KZK1-X1	36	=UACJA10GH100+UACJA10/32.6:C	RD	=UACJA10GH100+UACJA10-1K136	A1	=UACJA10GH100+UACJA10/32.6:D
=KZK1+KZK1-X1	25	=UACJA10GH100+UACJA10/31.1:C	BK	=UACJA10GH100+UACJA10-1K121	A1	=UACJA10GH100+UACJA10/31.1:D
=KZK1+KZK1-X1	32	=UACJA10GH100+UACJA10/32.2:C	VT	=UACJA10GH100+UACJA10-1K132	A1	=UACJA10GH100+UACJA10/32.2:D
=KZK1+KZK1-X1	34	=UACJA10GH100+UACJA10/32.4:C	GY-PK	=UACJA10GH100+UACJA10-1K134	A1	=UACJA10GH100+UACJA10/32.4:D
=KZK1+KZK1-X1	31	=UACJA10GH100+UACJA10/32.1:C	RD-BU	=UACJA10GH100+UACJA10-1K131	A1	=UACJA10GH100+UACJA10/32.1:D

Cable name :	-WK1003	Number of conductors :	4	Description :
Cable type :	LiYCY	Number of used conductors :	1	
		Cable cross section :	0.75	

External Connections			Connection color/number	Internal Connections		
To device	Pin designation	Page/column		From device	Pin designation	Page/column
			WH			
=KZK1+KZK1-X1	37	=UACJA10GH100+UACJA10/45.2:C	BN	=UACJA10GH100+UACJA10-X151	5:A	=UACJA10GH100+UACJA10/45.2:C
			GN			
			YE			

CONFIDENTIAL, ALL RIGHTS RESERVED DIN 34

Format ISO/DIN A3

Approved by Contractor			Reconstruction and Modernisation of HPP Perucica - Phase II	epcg	SINTAKSA A Voith Company	Unit KA1 control cubicle circuit diagrams	DRAWING No.: PERU-01-19-170-31-001	REV No.:	= UACJA10GH100
Approved by Designer	Grga Kolić	15.6.2026.			Sintaksa - A Voith Company Ulica Domovinskog rata 104C, 21 000 Split, Hrvatska				+ UACJA10
Checked by	Antonio Aleksić	15.6.2026.				CABLE DIAGRAM	Designer No.:	SALES No.:	PAGE 148
Drawn by	Tamara Trogrlić	15.6.2026.	PROJECT NAME	EMPLOYER	DESIGNER				PAGE 148 / 156

Cable name :	-WK1004	Number of conductors :	7	Description :
Cable type :	YSLY	Number of used conductors :	5	
		Cable cross section :	0.75	

External Connections			Connection color/number	Internal Connections		
To device	Pin designation	Page/column		From device	Pin designation	Page/column
=KZK1+KZK1-X2	1	=UACJA10GH100+UACJA10/52.4:E	BN	=UACJA10GH100+UACJA10-X15	11:A	=UACJA10GH100+UACJA10/52.4:D
=KZK1+KZK1-X2	3	=UACJA10GH100+UACJA10/52.4:E	BU	=UACJA10GH100+UACJA10-X15	7:A	=UACJA10GH100+UACJA10/52.4:B
=KZK1+KZK1-X2	10	=UACJA10GH100+UACJA10/52.2:E	GN	=UACJA10GH100+UACJA10-X15	9:A	=UACJA10GH100+UACJA10/52.2:D
=KZK1+KZK1-X2	9	=UACJA10GH100+UACJA10/52.2:E	GY	=UACJA10GH100+UACJA10-X15	10:A	=UACJA10GH100+UACJA10/52.2:D
=KZK1+KZK1-X2	5	=UACJA10GH100+UACJA10/52.6:E	YE	=UACJA10GH100+UACJA10-X15	12:A	=UACJA10GH100+UACJA10/52.6:D

Cable name :	-WK1005	Number of conductors :	4	Description :
Cable type :	LiYCY	Number of used conductors :	3	
		Cable cross section :	0.75	

External Connections			Connection color/number	Internal Connections		
To device	Pin designation	Page/column		From device	Pin designation	Page/column
			WH			
=KZK1+KZK1-X1	38	=UACJA10GH100+UACJA10/32.7:C	BN	=UACJA10GH100+UACJA10-1K137	A1	=UACJA10GH100+UACJA10/32.7:D
=KZK1+KZK1-X2	11	=UACJA10GH100+UACJA10/31.4:C	GN	=UACJA10GH100+UACJA10-1K124	A1	=UACJA10GH100+UACJA10/31.4:D
=KZK1+KZK1-X2	12	=UACJA10GH100+UACJA10/31.5:C	YE	=UACJA10GH100+UACJA10-1K125	A1	=UACJA10GH100+UACJA10/31.5:D

Cable name :	-WK1006	Number of conductors :	4	Description :
Cable type :	PP00	Number of used conductors :	2	
		Cable cross section :	1.5	

External Connections			Connection color/number	Internal Connections		
To device	Pin designation	Page/column		From device	Pin designation	Page/column
=TN+TN-X4	12	=UACJA10GH100+UACJA10/49.5:E	3	=UACJA10GH100+UACJA10-X62	7:A	=UACJA10GH100+UACJA10/49.5:D
=TN+TN-X4	13	=UACJA10GH100+UACJA10/49.6:E	4	=UACJA10GH100+UACJA10-X62	8:A	=UACJA10GH100+UACJA10/49.6:D

Cable name :	-WS811	Number of conductors :	4	Description :
Cable type :	LiYCY	Number of used conductors :	2	
		Cable cross section :	0.75	

External Connections			Connection color/number	Internal Connections		
To device	Pin designation	Page/column		From device	Pin designation	Page/column
=T1+T1-S811	1	=UACJA10GH100+UACJA10/30.5:B	WH	=UACJA10GH100+UACJA10-X140	7:A	=UACJA10GH100+UACJA10/30.5:B
			BN			
			GN			
			YE			
=T1+T1-S811	3	=UACJA10GH100+UACJA10/30.5:C	BN	=UACJA10GH100+UACJA10-1K115	A1	=UACJA10GH100+UACJA10/30.5:D

CONFIDENTIAL, ALL RIGHTS RESERVED DIN 34

Format ISO/DIN A3

Approved by Contractor			Reconstruction and Modernisation of HPP Perucica - Phase II	epcg	SINTAKSA A Voith Company	Unit KA1 control cubicle circuit diagrams	DRAWING No.:	REV No.:	= UACJA10GH100
Approved by Designer	Grga Kolić	15.6.2026.			Sintaksa - A Voith Company Ulica Domovinskog rata 104C, 21 000 Split, Hrvatska		PERU-01-19-170-31-001		+ UACJA10
Checked by	Antonio Aleksić	15.6.2026.				CABLE DIAGRAM	Designer No.:	SALES No.:	PAGE 149
Drawn by	Tamara Trogrlić	15.6.2026.	PROJECT NAME	EMPLOYER	DESIGNER				PAGE 149 / 156

Cable name :	-WUN300	Number of conductors :	4	Description :
Cable type :	PP00	Number of used conductors :	2	
		Cable cross section :	2.5	

External Connections			Connection color/number	Internal Connections		
To device	Pin designation	Page/column		From device	Pin designation	Page/column
=TN+TN-X1	1	=UACJA10GH100+UACJA10/10.6:E	1	=UACJA10GH100+UACJA10-X140	1:A	=UACJA10GH100+UACJA10/10.6:D
=TN+TN-X1	14	=UACJA10GH100+UACJA10/10.6:E	2	=UACJA10GH100+UACJA10-X140	10:A	=UACJA10GH100+UACJA10/10.6:D

Cable name :	-WUN301	Number of conductors :	7	Description :
Cable type :	LiYCY	Number of used conductors :	7	
		Cable cross section :	0.75	

External Connections			Connection color/number	Internal Connections		
To device	Pin designation	Page/column		From device	Pin designation	Page/column
=TN+TN-X1	29	=UACJA10GH100+UACJA10/30.1:C	WH	=UACJA10GH100+UACJA10-1K111	A1	=UACJA10GH100+UACJA10/30.1:D
=TN+TN-X1	30	=UACJA10GH100+UACJA10/30.2:C	BN	=UACJA10GH100+UACJA10-1K112	A1	=UACJA10GH100+UACJA10/30.2:D
=TN+TN-X1	31	=UACJA10GH100+UACJA10/50.4:E	GN	=UACJA10GH100+UACJA10-X136	15:A	=UACJA10GH100+UACJA10/50.4:D
=TN+TN-X1	32	=UACJA10GH100+UACJA10/50.2:E	YE	=UACJA10GH100+UACJA10-X136	13:A	=UACJA10GH100+UACJA10/50.2:D
=TN+TN-X1	33	=UACJA10GH100+UACJA10/50.3:E	GY	=UACJA10GH100+UACJA10-X136	14:A	=UACJA10GH100+UACJA10/50.3:D
=TN+TN-X1	36	=UACJA10GH100+UACJA10/50.5:E	PK	=UACJA10GH100+UACJA10-X136	16:A	=UACJA10GH100+UACJA10/50.5:D
=TN+TN-X1	37	=UACJA10GH100+UACJA10/50.6:E	BU	=UACJA10GH100+UACJA10-X136	17:A	=UACJA10GH100+UACJA10/50.6:D

Cable name :	-WUN302	Number of conductors :	4	Description :
Cable type :	LiYCY	Number of used conductors :	4	
		Cable cross section :	0.75	

External Connections			Connection color/number	Internal Connections		
To device	Pin designation	Page/column		From device	Pin designation	Page/column
=TN+TN-X1	38	=UACJA10GH100+UACJA10/46.1:E	WH	=UACJA10GH100+UACJA10-X140	15:B	=UACJA10GH100+UACJA10/46.1:D
=TN+TN-X1	39	=UACJA10GH100+UACJA10/46.3:E	BN	=UACJA10GH100+UACJA10-X61	1:A	=UACJA10GH100+UACJA10/46.3:E
=TN+TN-X1	40	=UACJA10GH100+UACJA10/46.3:E	GN	=UACJA10GH100+UACJA10-X61	2:A	=UACJA10GH100+UACJA10/46.3:E
=TN+TN-X1	41	=UACJA10GH100+UACJA10/46.3:E	YE	=UACJA10GH100+UACJA10-X61	3:A	=UACJA10GH100+UACJA10/46.3:E

Cable name :	-WUN303	Number of conductors :	4	Description :
Cable type :	LiYCY	Number of used conductors :	2	
		Cable cross section :	0.75	

External Connections			Connection color/number	Internal Connections		
To device	Pin designation	Page/column		From device	Pin designation	Page/column
=TN+TN-X1	47	=UACJA10GH100+UACJA10/51.3:E	BN	=UACJA10GH100+UACJA10-X13	4:A	=UACJA10GH100+UACJA10/51.3:D
=TN+TN-X1	46	=UACJA10GH100+UACJA10/51.3:E	WH	=UACJA10GH100+UACJA10-X13	5:A	=UACJA10GH100+UACJA10/51.3:D

CONFIDENTIAL, ALL RIGHTS RESERVED DIN 34

Format ISO/DIN A3

Approved by Contractor			Reconstruction and Modernisation of HPP Perucica - Phase II	epcg	SINTAKSA A Voith Company Sintaksa - A Voith Company Ulica Domovinskog rata 104C, 21 000 Split, Hrvatska	Unit KA1 control cubicle circuit diagrams	DRAWING No.: PERU-01-19-170-31-001	REV No.:	= UACJA10GH100
Approved by Designer	Grga Kolić	15.6.2026.							+ UACJA10
Checked by	Antonio Aleksić	15.6.2026.				CABLE DIAGRAM	Designer No.:	SALES No.:	PAGE 150
Drawn by	Tamara Trogrlić	15.6.2026.	PROJECT NAME	EMPLOYER	DESIGNER				PAGE 150 / 156

Cable name :	-WUN304	Number of conductors :	7	Description :
Cable type :	LiYCY	Number of used conductors :	4	
		Cable cross section :	0.75	

External Connections			Connection color/number	Internal Connections		
To device	Pin designation	Page/column		From device	Pin designation	Page/column
=TN+TN-X2	12	=UACJA10GH100+UACJA10/44.5:C	WH	=UACJA10GH100+UACJA10-X151	3:A	=UACJA10GH100+UACJA10/44.5:C
=TN+TN-X2	15	=UACJA10GH100+UACJA10/30.3:C	BN	=UACJA10GH100+UACJA10-1K113	A1	=UACJA10GH100+UACJA10/30.3:D
=TN+TN-X2	18	=UACJA10GH100+UACJA10/44.1:C	GN	=UACJA10GH100+UACJA10-X151	1:A	=UACJA10GH100+UACJA10/44.1:C
=TN+TN-X2	20	=UACJA10GH100+UACJA10/44.3:C	YE	=UACJA10GH100+UACJA10-X151	2:A	=UACJA10GH100+UACJA10/44.3:C
			GY			
			PK			
			BU			

Cable name :	-WUN310	Number of conductors :	4	Description :
Cable type :	PP00	Number of used conductors :	4	
		Cable cross section :	1.5	

External Connections			Connection color/number	Internal Connections		
To device	Pin designation	Page/column		From device	Pin designation	Page/column
=TN+TN-X3	6	=UACJA10GH100+UACJA10/49.2:E	1	=UACJA10GH100+UACJA10-X62	1:A	=UACJA10GH100+UACJA10/49.2:D
=TN+TN-X3	7	=UACJA10GH100+UACJA10/49.2:E	2	=UACJA10GH100+UACJA10-X62	2:A	=UACJA10GH100+UACJA10/49.2:D
=TN+TN-X3	17	=UACJA10GH100+UACJA10/49.4:E	BN	=UACJA10GH100+UACJA10-X62	5:A	=UACJA10GH100+UACJA10/49.4:D
=TN+TN-X3	18	=UACJA10GH100+UACJA10/49.5:E	GNYE	=UACJA10GH100+UACJA10-X62	6:A	=UACJA10GH100+UACJA10/49.5:D

Cable name :	-WUN311	Number of conductors :	4	Description :
Cable type :	PP00	Number of used conductors :	2	
		Cable cross section :	1.5	

External Connections			Connection color/number	Internal Connections		
To device	Pin designation	Page/column		From device	Pin designation	Page/column
=TN+TN-X4	5	=UACJA10GH100+UACJA10/49.3:E	1	=UACJA10GH100+UACJA10-X62	3:A	=UACJA10GH100+UACJA10/49.3:D
=TN+TN-X4	6	=UACJA10GH100+UACJA10/49.3:E	2	=UACJA10GH100+UACJA10-X62	4:A	=UACJA10GH100+UACJA10/49.3:D

Cable name :	-WUN312	Number of conductors :	7	Description :
Cable type :	LiYCY	Number of used conductors :	6	
		Cable cross section :	0.75	

External Connections			Connection color/number	Internal Connections		
To device	Pin designation	Page/column		From device	Pin designation	Page/column
=TN+TN-X3	9	=UACJA10GH100+UACJA10/29.3:C	WH	=UACJA10GH100+UACJA10-1K103	A1	=UACJA10GH100+UACJA10/29.3:D
=TN+TN-X3	10	=UACJA10GH100+UACJA10/29.4:C	BN	=UACJA10GH100+UACJA10-1K104	A1	=UACJA10GH100+UACJA10/29.4:D
=TN+TN-X4	8	=UACJA10GH100+UACJA10/29.5:C	GN	=UACJA10GH100+UACJA10-1K105	A1	=UACJA10GH100+UACJA10/29.5:D
=TN+TN-X4	9	=UACJA10GH100+UACJA10/29.6:C	YE	=UACJA10GH100+UACJA10-1K106	A1	=UACJA10GH100+UACJA10/29.6:D
=TN+TN-X3	21	=UACJA10GH100+UACJA10/29.8:C	GY	=UACJA10GH100+UACJA10-1K108	A1	=UACJA10GH100+UACJA10/29.8:D
			PK			
=TN+TN-X3	20	=UACJA10GH100+UACJA10/29.7:C	BU	=UACJA10GH100+UACJA10-1K107	A1	=UACJA10GH100+UACJA10/29.7:D

CONFIDENTIAL, ALL RIGHTS RESERVED DIN 34

Format ISO/DIN A3

Approved by Contractor			Reconstruction and Modernisation of HPP Perucica - Phase II	epcg	SINTAKSA A Voith Company, Sintaksa - A Voith Company, Ulica Domovinskog rata 104C, 21 000 Split, Hrvatska	Unit KA1 control cubicle circuit diagrams	DRAWING No.: PERU-01-19-170-31-001	REV No.:	= UACJA10GH100
Approved by Designer	Grga Kolić	15.6.2026.							+ UACJA10
Checked by	Antonio Aleksić	15.6.2026.				CABLE DIAGRAM	Designer No.:	SALES No.:	PAGE 151
Drawn by	Tamara Trogrlić	15.6.2026.	PROJECT NAME	EMPLOYER	DESIGNER				PAGE 151 / 156

Device Tag (Location + Displayed DT)		Qty.	Description	Designation	Type number	Manufacturer	Part number
=UACJA10GH100+UACJA10	**A100**	1	PROFINET, 2-port interface module IM 155-6PN/2 SIMATIC ET 200SP 1 BusAdapter slot; max. 64 I/O modules; 16 ET 200AL modules	Interface module ET200SP	6ES7155-6AU01-0CN0	SIE	SIE.6ES7155-6AU01-0CN0
=UACJA10GH100+UACJA10	**A100**	1	SIMATIC ET 200SP, BA 2X RJ45, 2 RJ45 SOCKETS FOR PROFINET	PLC Bus adapter	6ES7193-6AR00-0AA0	SIE	SIE.6ES7193-6AR00-0AA0
=UACJA10GH100+UACJA10	**A101**	1	Power supply module 25W 24 V DC Simatic S7-1500 Supplies the backplane bus of the S7-1500 with operating voltage	Power supply module for S7-1500	6ES7505-0KA00-0AB0	SIE	SIE.6ES7505-0KA00-0AB0
=UACJA10GH100+UACJA10	**A102**	1	Work memory 1 MB and 4.5 MB for data 1st interface: PROFINET IRT with 2-port switch, 2nd interface: PROFINET RT, 6 ns bit performance SIMATIC Memory Card required	CPU 1515-2 PN SIMATIC S7-1500	6ES7515-2AN03-0AB0	SIE	SIE.6ES7515-2AN03-0AB0
=UACJA10GH100+UACJA10	**A102**	1	SIMATIC S7, memory cards for S7-1x00 CPU/SINAMICS, 3, 3V Flash, 24 MB	SIMATIC S7 Memory card 24 MB For S7-1x00 CPU	6ES7954-8LF04-0AA0	SIE	SIE.6ES7954-8LF04-0AA0
=UACJA10GH100+UACJA10	**A103**	2	Communications module CM 1542-1 for connection of S7-1500 to PROFINET as IO Controller or IO Device: TCP/IP, ISO-on-TCP, UDP, S7 communication, IP broadcast multicast, SNMPV1, time-of-day synchronization via NTP, 2xRJ45 (10/100 Mbit).	CM 1542-1	6GK7542-1AX10-0XE0	SIE	SIE.6GK7542-1AX10-0XE0
=UACJA10GH100+UACJA10	**A104;A105**	2	1 channel for 24V incremental encoder or pulse encoder Type: TM count 1x 24 V Counter module Order No.: 6ES7138-6AA01-0BA0	Counter module for ET200SP	6ES7138-6AA01-0BA0	SIE	SIE.6ES7138-6AA01-0BA0
=UACJA10GH100+UACJA10	**A104;A131;A141**	3	SIMATIC ET 200SP BU type A0 push-in terminals, without aux. terminals, new load group	BaseUnit BU15-P16+A0+2D	6ES7193-6BP00-0DA0	SIE	SIE.6ES7193-6BP00-0DA0
=UACJA10GH100+UACJA10	**A105;A111...A120 A132...A134;A151;A152 A161**	17	BU type A0, Push-in terminals, without AUX terminals, bridged to the left	BaseUnit BU15-P16+A0+2B	6ES7193-6BP00-0BA0	SIE	SIE.6ES7193-6BP00-0BA0
=UACJA10GH100+UACJA10	**A111...A120**	10	DI 16X24V DC Standard type 3 (IEC 61131); sink input; fits to BU-type A0 input delay time 0,05..20ms; Diagnostics: wire break, supply voltage	Digital input module ET 200SP	6ES7131-6BH01-0BA0	SIE	SIE.6ES7131-6BH01-0BA0
=UACJA10GH100+UACJA10	**A131...A134**	4	DQ 16x 24V DC/0,5A fits to BU-type A0; Source output (PNP/P-switching); substitute value output, Module diagnostics: short-circuit to L+ and ground, wire break, supply voltage	Digital output module ET200SP	6ES7132-6BH01-0BA0	SIE	SIE.6ES7132-6BH01-0BA0
=UACJA10GH100+UACJA10	**A141**	1	AI 4XI 2-/4-WIRE Standard fits to BU-TYPE A0, A1 Module diagnosis, 16 bit, +/-0,3%	Analog input module SIMATIC ET 200SP	6ES7134-6GD01-0BA1	SIE	SIE.6ES7134-6GD01-0BA1
=UACJA10GH100+UACJA10	**A151;A152**	2	Analog input module for ET200SP, Type: AI 2XI 2-/4-WIRE Standard	Analog input module for ET 200SP	6ES7134-6GB00-0BA1	SIE	SIE.6ES7134-6GB00-0BA1
=UACJA10GH100+UACJA10	**A161**	1	SIMATIC ET 200SP, Analog output module, AQ 4XU/I Standard, suitable for BU type A0, A1, Color code CC00, Module diagnostic s, 16 bit, +/-0.3%	Analog output module	6ES7135-6HD00-0BA1	SIE	SIE.6ES7135-6HD00-0BA1
=UACJA10GH100+UACJA10	**A171**	1	SIMATIC ET 200SP, analog input module, AI Energy Meter CT ST, for 1A or 5A current transformer, suitable for BU type U0, cha nnel diagnostics	SIMATIC ET 200SP AI Energy Meter CT ST	6ES7134-6PA01-0BU0	SIE	SIE.6ES7134-6PA01-0BU0
=UACJA10GH100+UACJA10	**A171**	1	SIMATIC ET 200SP, BaseUnit BU20-P16+A0+2D, BU-TYPE U0, Packaging Unit: 1 Pieces, Push-in terminals, w/o AUX-terminals, n ew potential group, WxH: 20mm x 117mm	SIMATIC ET 200SP BU type U0 BU20-P16+A0+2D PU 1	6ES7193-6BP00-0DU0	SIE	SIE.6ES7193-6BP00-0DU0
=UACJA10GH100+UACJA10	**A350**	1	SIMATIC HMI MTP1500, Unified Comfort Panel, touch operation, 15.6" widescreen TFT display, 16 million colors, PROFINET inter face, configurable as of WinCC Unified Comfort V16, contains open-source software, which is provided free of charge see enclose d DVD	SIMATIC HMI MTP1500 Unified Comfort	6AV2128-3QB06-0AX1	SIE	SIE.6AV2128-3QB06-0AX1
=UACJA10GH100+UACJA10	**A350**	1	2GB Type: SIMATIC SD Order No.: 6AV2181-8XP00-0AX0	Memory card	6AV2181-8XP00-0AX0	SIE	SIE.6AV2181-8XP00-0AX0
=UACJA10GH100+UACJA10	**B101**	1	HellermannTyton Thermostat, NC contact 0...+60°C	Thermostat	THR02	ALFA ELECTRIC	THR02
=UACJA10GH100+UACJA10	**B102**	1	Hygrostat, Rated Voltage 120-240 V AC, Rated Current 10-5A 10-90 %RF	Electronic hygrostat	IGR35F	FANDIS	FANDISEU.IGR35F
=UACJA10GH100+UACJA10	**B103**	1	NO contact 0...+60°C	Thermostat	THV02	ALFA ELECTRIC	AEL.THV02

CONFIDENTIAL, ALL RIGHTS RESERVED DIN 34

Format ISO/DIN A3

Approved by Contractor			Reconstruction and Modernisation of HPP Perucica - Phase II	epcg	SINTAKSA A Voith Company Sintaksa - A Voith Company Ulica Domovinskog rata 104C, 21 000 Split, Hrvatska	Unit KA1 control cubicle circuit diagrams	DRAWING No.: PERU-01-19-170-31-001	REV No.:	= UACJA10GH100 + UACJA10
Approved by Designer	Grga Kolić	15.6.2026.				Summarized parts list	Designer No.:	SALES No.:	PAGE 152
Checked by	Antonio Aleksić	15.6.2026.							PAGE 152 / 156
Drawn by	Tamara Trogrlić	15.6.2026.	PROJECT NAME	EMPLOYER	DESIGNER				

Device Tag (Location + Displayed DT)		Qty.	Description	Designation	Type number	Manufacturer	Part number
=UACJA10GH100+UACJA10	**B111**	1	Nominal voltage: 110...240VAC (50...60Hz)/27Hz (tip. 24VDC) 2 relay outputs, 2 transistor outputs Analog output: 0/4...20mA Impuls inputs: pnp/npn, NAMUR (24V) Input frequency (max): 5kHz Setting range: 1...60000 imp/min (0,1...1000Hz)	Speed monitoring relay MONITOR/FR-1 /110-240VAC/DC	DD2503	IFM	IFM.DD2503
=UACJA10GH100+UACJA10	**E101;E102**	2	Slim enclosure LED lamp, 9 W, 100 to 230V, 50H, 538×23×36 mm	LED system light	LL49W-100-230V	AE	AE.LL49W-100-230V
=UACJA10GH100+UACJA10	**F0**	1	RCBO, 10 kA, 1P+N, type AC, 30 mA, C-char, In: 13 A, Un AC: 230 V	RCBO	5SU1354-1KK13	SIE	SIE.5SU1354-1KK13
=UACJA10GH100+UACJA10	**F11;F12**	2	MCB - 440 VDC Number poles: 2P Class: B Max current: 10A	10A, 2P, 440 VDC, B curve	5SY5210-6	SIE	SIE.5SY5210-6
=UACJA10GH100+UACJA10	**F11...F16;F131...F147**	23	1 C/O For MCB 5SL, 5SY, 5SP; Incorporated switch 5TL1 RCBO 5SU1, RC 5SV Rated voltage: 30 V	Auxiliary switch	5ST3016	SIE	SIE.5ST3016
=UACJA10GH100+UACJA10	**F13...F16**	4	MCB - 440 VDC Number poles: 2P Class: B Max current: 6A	6A, 2P, 440 VDC, B curve	5SY5206-6	SIE	SIE.5SY5206-6
=UACJA10GH100+UACJA10	**F25G**	1	Power supply: 24 Vdc Discrete raise/lower: Speed Discrete raise/lower: Voltage Discrete alarm inputs: 4; discrete outputs: 2 Measuring inputs: 400 Vac Type: SPM-D2-10 Order No.: 8440-216t	Automatic synchronizer	8440-2164	Woodward	Woodward.8440-2164
=UACJA10GH100+UACJA10	**F131...F134;F139...F146**	12	Miniature circuit breaker 230/400 V 10kA, 1-pole, B, 6 A, D=70 mm	SENTRON Miniature circuit breaker	5SY4106-6	SIE	SIE.5SY4106-6
=UACJA10GH100+UACJA10	**F135;F137;F138;F147**	4	230/400V 10kA 1-pole B curve 2A	Miniature circuit breaker	5SY4102-6	SIE	SIE.5SY4102-6
=UACJA10GH100+UACJA10	**F136**	1	230/400 V 10kA 1-pole B curve 10A	Miniature circuit breaker, 10kA, 1-pole, B, 10A	5SY4110-6	SIE	SIE.5SY4110-6
=UACJA10GH100+UACJA10	**H01**	1	The flexible fault annunciator series BSM-P, programmable	Panel mounted fault annunciator	BSM-P 59B1611PR000	ESS	BSM-P 59B1611PR000
=UACJA10GH100+UACJA10	**H101;H106**	2	The indicators glow in two colors: red or green. Power supply is connected as follows: X0 - common terminal (ground) X1 - red color (voltage) X2 - green color (voltage) Diameter - 22mm 24 AC/DC	Indicator Light	PK22-WP/24	SPAMEL	SPAMEL.PK22-WP/24
=UACJA10GH100+UACJA10	**H103**	1	Indicator lights, 22 mm, round, metal, shiny, yellow, lens, smooth, with holder, LED module with integrated LED 24 V AC/DC, scr ew terminal	INDICATOR LIGHT, YELLOW	3SU1152-6AA30-1AA0	SIE	SIE.3SU1152-6AA30-1AA0
=UACJA10GH100+UACJA10	**H103...H105;S100;S103 S104;S111...S114;S121 S130;S131;S203;S221 S222;S290;S291;S302**	19	Label holder, 22mm, frame rectangular at the bottom, black, for labeling plate 17.5 mm x 27 mm, for gluing	SIRIUS ACT Label holder	3SU1900-0AP10-0AA0	SIE	SIE.3SU1900-0AP10-0AA0
=UACJA10GH100+UACJA10	**H104**	1	Indicator lights, 22 mm, round, metal, shiny, red, lens, smooth, with holder, LED module with integrated LED 24 V AC/DC, screw terminal	INDICATOR LIGHT, RED	3SU1152-6AA20-1AA0	SIE	SIE.3SU1152-6AA20-1AA0
=UACJA10GH100+UACJA10	**H105**	1	Indicator lights, 22 mm, round, metal, shiny, white, lens, smooth, with holder, LED module with integrated LED 24 V AC/DC, scr ew terminal	INDICATOR LIGHT, WHITE	3SU1152-6AA60-1AA0	SIE	SIE.3SU1152-6AA60-1AA0
=UACJA10GH100+UACJA10	**K1**	1	REV. COMB., AC3, 4KW/400V DC24V 3-POLE, SZ S00 SCREW TERMINAL ELECTR. AND MECH. INTERLOCK Electrical and mechan ical interlocking	REV.COMB.,4KW, DC24V	3RA2316-8XB30-1BB4	SIE	SIE.3RA2316-8XB30-1BB4
=UACJA10GH100+UACJA10	**K01;K302;K303**	3	Contactor relay, 4NO, 24VDC, with integrated diode, size S00, screw terminal	SIRIUS contactor relay	3RH2140-1FB40	SIE	SIE.3RH2140-1FB40
=UACJA10GH100+UACJA10	**K01**	1	Auxiliary switch block , 3NO+1NC conditional paths: 1NO, 1NC, 1NO, 1NO, for contactor relays size S00, screw terminal DIN EN 50011	AUX. SWITCH BLOCK , 3NO+1NC COND. PATHS: 1NO, 1NC,	3RH2911-1GA31	SIE	SIE.3RH2911-1GA31

CONFIDENTIAL, ALL RIGHTS RESERVED DIN 34

Format ISO/DIN A3

Approved by Contractor			Reconstruction and Modernisation of HPP Perucica - Phase II	epcg	SINTAKSA A Voith Company Sintaksa - A Voith Company Ulica Domovinskog rata 104C, 21 000 Split, Hrvatska	Unit KA1 control cubicle circuit diagrams	DRAWING No.: PERU-01-19-170-31-001	REV No.:	= UACJA10GH100
Approved by Designer	Grga Kolić	15.6.2026.							+ UACJA10
Checked by	Antonio Aleksić	15.6.2026.				Summarized parts list	Designer No.:	SALES No.:	PAGE 153
Drawn by	Tamara Trogrlić	15.6.2026.	PROJECT NAME	EMPLOYER	DESIGNER				PAGE 153 / 156

Device Tag (Location + Displayed DT)		Qty.	Description	Designation	Type number	Manufacturer	Part number
=UACJA10GH100+UACJA10	**K101...K103**	3	6 A 4 CO With LED With lockable test button 24 V DC	Miniature plug-in relay - Zelio RXM	RXM4AB2BD	SE	SE.RXM4AB2BD
=UACJA10GH100+UACJA10	**K101...K103**	3	Separate contact For RXM2/RXM4 relays 4 C/O, screw connectors 10 A, 250V AC	Socket RXZ	RXZE2S114M	SE	SE.RXZE2S114M
=UACJA10GH100+UACJA10	**2K201...2K203 K101...K103 K201...K210**	16	Harmony, Protection module, diode, for RSZ, 6...230 V DC	Protection module Harmony 6...230V DC	SE.RZM040W	SE	SE.RZM040W
=UACJA10GH100+UACJA10	**2K201...2K203 K201...K210**	13	Nominal coil voltage: 24VDC Nominal contact current: 5A 2 CO, with LED, lockable test button Base: RGZE1S48M Protection diode: RXM040W	Interface plug-in relay - Zelio RXG	RXG22BD	SE	SE.RXG22BD
=UACJA10GH100+UACJA10	**2K201...2K203 K201...K210**	13	Socket with clamp, 5 A, For RXG2 relays 2 C/O, screw connectors	Socket	RGZE1S48M	SE	SE.RGZE1S48M
=UACJA10GH100+UACJA10	**K301**	1	SIRIUS safety relay Basic unit Standard series Relay enabling circuits 3 NO contacts plus Relay signaling circuit 1 NC contact Us = 24 V AC/DC screw terminal	SIRIUS SAFETY RELAY STD RELAYS 3NO+1NC	3SK1111-1AB30	SIE	SIE.3SK1111-1AB30
=UACJA10GH100+UACJA10	**K302;K303**	2	Auxiliary switch block 4NC, only with contactor relays 3RH2140 and 3RH2440 combinable, screw terminal DIN EN 50011	AUXILIARY SWITCH BLOCK, 4NC	3RH2911-1GA04	SIE	SIE.3RH2911-1GA04
=UACJA10GH100+UACJA10	**K304;K305**	2	Contactor relay, 44E, DIN EN 50011, 4NO + 4NC, screw terminal DC operation 24 V DC	Contactor relay	3TH4244-0BB4	SIE	SIE.3TH4244-0BB4
=UACJA10GH100+UACJA10	**K304;K305;K401;K402**	4	Surge suppressor Interference suppression diode with cable spacer 24-250 V DC for mounting to coil terminal for contactor relay s 3TH4	Surge suppressor	3TX7402-3A	SIE	SIE.3TX7402-3A
=UACJA10GH100+UACJA10	**K310**	1	Fast-acting relay: -Type:7PA2341 -Auxiliary voltage: 220 V DC -Operating time: 8 ms -Order No. of housing for base: 7XP9013-0 -With reset pushbutton	Fast lock-out relay 4 CO, 220VDC	7PA2341	SIE	SIE.7PA2341
=UACJA10GH100+UACJA10	**K310**	1	SOCKET FOR SURFACE MOUNTING FOR 7PA23, 7PA27 AND AND SINGLE-PHASE 7PA30 RELAY	Socket	7XP9013-0	SIE	SIE.7XP9013-0
=UACJA10GH100+UACJA10	**K401;K402**	2	Contactor relay, 53E, DIN EN 50011, 5NO + 3NC, screw terminal DC operation 24 V DC	Contactor relay	3TH4253-0BB4	SIE	SIE.3TH4253-0BB4
=UACJA10GH100+UACJA10	**1K11;1K25...1K28;1K31 1K45;1K46;1K54;1K76 1K96...1K98 1K154...1K156**	16	Auxiliary relay Nominal coil voltage: 24VDC 2 CO	Interface relay 24VDC, 2CO	PLC-RSC-24DC/21-21	PXC	PXC.PLC-RSC-24DC/21-21
=UACJA10GH100+UACJA10	**1K12...1K16 1K21...1K24 1K32...1K38 1K41...1K44;1K47;1K48 1K51...1K53 1K55...1K57;1K75;1K77 1K78;1K81...1K88 1K91...1K95 1K101...1K108 1K111...1K118 1K121...1K128 1K131...1K138 1K141...1K148 1K151...1K153;1K157 1K158;1K161...1K168 2K01...2K30**	127	PLC-INTERFACE, consisting of PLC-BSC.../21 basic terminal block with screw connection and plug-in miniature relay with power contact, 1 C/O, input voltage 24 V DC for mounting on DIN rail NS 35/7,5	Auxiliary relay	PLC-RSC-24DC/21	PXC	PXC.PLC-RSC-24DC/21
=UACJA10GH100+UACJA10	**1K58;1K61;1K64;1K65**	4	Auxiliary relay Nominal coil voltage: 230VAC/220VDC 2 C/O	Interface relay 230VAC/220VDC, 2CO	PLC-RSC-230UC/21-21	PXC	PXC.PLC-RSC-230UC/21-21
=UACJA10GH100+UACJA10	**1K62;1K63;1K66...1K68 1K71...1K74**	9	Input voltage 230 V AC/220 V DC	Auxiliary relay	PLC-RSC-230UC/21	PXC	PXC.PLC-RSC-230UC/21
=UACJA10GH100+UACJA10	**2K101...2K110;2K111A 2K112A;2K113;2K114**	14	COUPLING CONTACTOR RELAY, 4NO, DC 24V, 0.85...1.85*US, W/ INTEGRATED DIODE, SIZE S00, SCREW TERMINAL	COUPL.CONT.RELAY,4NO,DC24V,DIODE	3RH2140-1VB40	SIE	SIE.3RH2140-1VB40
=UACJA10GH100+UACJA10	**2K111;2K112**	2	COUPLING CONTACTOR RELAY, 3NO+1NC, DC 24V, 0.85..1.85*US, W/ INTEGRATED DIODE, SIZE S00, SCREW TERMINAL	COUPL.CONT.RELAY,3NO+1NC,DC24V,DIODE	3RH2131-1VB40	SIE	SIE.3RH2131-1VB40
=UACJA10GH100+UACJA10	**M101;M102**	2	SK Blue e+ fan-and-filter unit, 218/191 m³/h, 230 V, 1~, 50 Hz/60 Hz, WHD 255 x 255 x 129 mm, RAL 7035	Blue e+ Fan-and-filter units	SK.3240700	RIT	RIT.3240700

CONFIDENTIAL, ALL RIGHTS RESERVED DIN 34

Format ISO/DIN A3

Approved by Contractor			Reconstruction and Modernisation of HPP Perucica - Phase II	epcg	SINTAKSA A Voith Company Sintaksa - A Voith Company Ulica Domovinskog rata 104C, 21 000 Split, Hrvatska	Unit KA1 control cubicle circuit diagrams	DRAWING No.: PERU-01-19-170-31-001	REV No.: = UACJA10GH100
Approved by Designer	Grga Kolić	15.6.2026.						+ UACJA10
Checked by	Antonio Aleksić	15.6.2026.				Summarized parts list	Designer No.:	SALES No.: PAGE 154
Drawn by	Tamara Trogrlić	15.6.2026.	PROJECT NAME	EMPLOYER	DESIGNER			PAGE 154 / 156

Device Tag (Location + Displayed DT)		Qty.	Description	Designation	Type number	Manufacturer	Part number
=UACJA10GH100+UACJA10	**P1**	1	Scale: 0-200% Input signal: 4-20mA	Analog panel meter	MA19LN A900X000008	LUMEL	LUMEL.MA19LN A900X000008
=UACJA10GH100+UACJA10	**P101**	1	Type: SENTRON PAC3220 Power supply: 24 ... 60 VDC -20/+10 % LCD 96x96mm protocol: Modbus TCP input: 690/400V 45-65Hz IE rated input: X/1A oder X/5A AC screw connections	Power monitoring device	7KM3220-1BA01-1EA0	SIE	SIE.7KM3220-1BA01-1EA0
=UACJA10GH100+UACJA10	**P101**	1	expansion module switched Ethernet PROFINET V3, plug-in, for 7KM PAC32x0 / 4200 / 3VA COM100/ 800	SENTRON Switched Ethernet PROFINET V3 expansion module	7KM9300-0AE02-0AA0	SIE	SIE.7KM9300-0AE02-0AA0
=UACJA10GH100+UACJA10	**P110**	1	Scale: 0-500 V, 48x48mm Direct measurement	Analog panel meter	EA16N E61500000A8	LUMEL	LUMEL.EA16N E61500000A8
=UACJA10GH100+UACJA10	**P411**	1	Scale: 360° Power supply from bus bar or generator Displayed value equal to voltage input	Synchronisation meters for manual or semiautomatic synchronisation	SQ0214	Iskra	Iskra.SQ0214-L-400V-R3-N-N-S-A-0
=UACJA10GH100+UACJA10	**PE_SH;X151;XF201**	13	Fuse modular terminal block, fuse type: Glass / ceramics / ..., fuse type: G / 5 x 20, nom. voltage: 500 V, nominal current: 6.3 A , number of positions: 1, connection method: Screw connection, Rated cross section: 1.5 mm2, cross section: 0.2 mm2- 6 mm2, mounting type: NS 35/7,5, NS 35/15, NS 32, color: black	Fuse terminal block UK 5-HESI N	3000539	PXC	PXC.3000539
=UACJA10GH100+UACJA10	**R101;R102**	2	Rated power: 100W Input voltage: 110-250V	Heater	HT100	ALFA ELECTRIC	AE.HT100
=UACJA10GH100+UACJA10	**S100**	1	RONIS key-operated switch, 22 mm, round, metal, shiny, lock number SB30, with 2 keys, 2 switch positions O-I, latching, actuati ng angle 90°, 10:30h/13:30h, key removal O+I, with holder, 1 NO+1 NC, screw terminal, possible special locks: 3SB31, 421, 45 5	KEY-OPERATED SWITCH RONIS, O-I	3SU1150-4BF11-1FA0	SIE	SIE.3SU1150-4BF11-1FA0
=UACJA10GH100+UACJA10	**S100**	1	DIN rail mounting base - Ø 22 mm units - for control and signalling unit	DIN rail mounting base - Ø 22 mm units - for control and signalling unit	A9A15151	SE	SE.A9A15151
=UACJA10GH100+UACJA10	**S101;S102**	2	Door contact, 1NO+1NC	Door contact	XCKN2110G11	SE	SE.XCKN2110G11
=UACJA10GH100+UACJA10	**S103;S104**	2	Selector switch, illuminable, 22 mm, round, metal, shiny, white, selector switch, short, 2 switch positions O-I, latching, actuating angle 90°, 10:30h/13:30h, with holder, 1 NO, screw terminal	SELECTOR SWITCH, O-I, BLACK, WHITE	3SU1150-2BF60-1BA0	SIE	SIE.3SU1150-2BF60-1BA0
=UACJA10GH100+UACJA10	**S103**	1	Contact module with 2 contact elements, 2 NC, screw terminal, for front plate mounting	CONTACT MODULE 2NC	3SU1400-1AA10-1EA0	SIE	SIE.3SU1400-1AA10-1EA0
=UACJA10GH100+UACJA10	**S104**	1	Contact module with 1 contact element, 1 NC, screw terminal, for front plate mounting	Contact module with 1 contact element, 1 NC	3SU1400-1AA10-1CA0	SIE	SIE.3SU1400-1AA10-1CA0
=UACJA10GH100+UACJA10	**S111;S113;S131;S291**	4	Illuminated pushbutton, 22 mm, round, metal, shiny, green, pushbutton, flat, momentary contact type, with holder, 1 NO, LED module with integrated LED 24 V AC/DC, screw terminal	ILLUMINATED PUSHBUTTON, GREEN	3SU1152-0AB40-1BA0	SIE	SIE.3SU1152-0AB40-1BA0
=UACJA10GH100+UACJA10	**S112;S114;S130;S221 S222**	7	Contact module with 1 contact element, 1 NO, screw terminal, for front plate mounting	Contact module with 1 contact element, 1 NO	3SU1400-1AA10-1BA0	SIE	SIE.3SU1400-1AA10-1BA0
=UACJA10GH100+UACJA10	**S112;S114;S130**	3	Illuminated pushbutton, 22 mm, round, metal, shiny, red, pushbutton, flat, momentary contact type	ILLUMINATED PUSHBUTTON, RED	3SU1051-0AB20-0AA0	SIE	SIE.3SU1051-0AB20-0AA0
=UACJA10GH100+UACJA10	**S112;S114;S130;S221 S222**	5	Holder for 3 modules, universal, plastic/metal	HOLDER	3SU1550-0AA10-0AA0	SIE	SIE.3SU1550-0AA10-0AA0
=UACJA10GH100+UACJA10	**S112;S114;S130;S301**	4	LED MODULE WITH INTEGRATED LED 24V AC/DC, RED, SCREW TERMINAL, FOR FRONT PLATE MOUNTING	LED MODULE, RED	3SU1401-1BB20-1AA0	SIE	SIE.3SU1401-1BB20-1AA0
=UACJA10GH100+UACJA10	**S121**	1	Selector switch, illuminable, 22 mm, round, metal, shiny, white, selector switch, short, 3 switch positions I-O-II, latching, actuati ng angle 2x45°, 10:30h/12h/13:30h, with holder, 2x1NO+1NC, screw terminal	SELECTOR SWITCH, I-O-II, BLACK, WHITE	3SU1150-2BL60-1LA0	SIE	SIE.3SU1150-2BL60-1LA0
=UACJA10GH100+UACJA10	**S203;S302**	2	Pushbutton, 22 mm, round, metal, shiny, black, pushbutton, flat, momentary contact type, with holder, 1 NO, screw terminal	PUSHBUTTON, BLACK	3SU1150-0AB10-1BA0	SIE	SIE.3SU1150-0AB10-1BA0
=UACJA10GH100+UACJA10	**S221**	1	Selector switch, illuminable, 22 mm, round, metal, shiny, red, selector switch, short, 3 switch positions I>O<II, momentary cont act type, actuating angle 2x45°, 10:30h/12h/13:30h	SELECTOR SWITCH, I>O<II, RED	3SU1052-2BM20-0AA0	SIE	SIE.3SU1052-2BM20-0AA0
=UACJA10GH100+UACJA10	**S222**	1	Selector switch, illuminable, 22 mm, round, metal, shiny, blue, selector switch, short, 3 switch positions I>O<II, momentary con tact type, actuating angle 2x45°, 10:30h/12h/13:30h	SELECTOR SWITCH, I>O<II, BLUE	3SU1052-2BM50-0AA0	SIE	SIE.3SU1052-2BM50-0AA0
=UACJA10GH100+UACJA10	**S290**	1	Illuminated pushbutton, 22 mm, round, metal, shiny, red, pushbutton, flat, momentary contact type, with holder, 1 NO+1 NC, L ED module with integrated LED 24 V AC/DC, screw terminal	ILLUMINATED PUSHBUTTON, RED	3SU1152-0AB20-1FA0	SIE	SIE.3SU1152-0AB20-1FA0
=UACJA10GH100+UACJA10	**S301**	1	Illuminated mushroom pushbutton, 22 mm, round, metal, shiny, red, 40 mm, latching, Pull-to-unlatch mechanism	ILLUM. MUSHROOM PUSHBUTTON, 40MM, RED	3SU1051-1BA20-0AA0	SIE	SIE.3SU1051-1BA20-0AA0
=UACJA10GH100+UACJA10	**S301**	1	PROTECTIVE COLLAR FOR EM. STOP MUSHROOM PUSHBUTTON, WITHOUT OR WITH RONIS LOCK, YELLOW, PLASTIC	PROTECTIVE COLLAR	3SU1900-0DY30-0AA0	SIE	SIE.3SU1900-0DY30-0AA0
=UACJA10GH100+UACJA10	**S301**	1	Holder for 3 modules, metal, 1 NC, 1 NC, screw terminal	HOLDER, CONTACT MODULE 1NC,1NC	3SU1550-1AA10-1PA0	SIE	SIE.3SU1550-1AA10-1PA0
=UACJA10GH100+UACJA10	**SV1;SV2**	2	2P DC Switch Disconnector Nominal current: 20 A Insulation voltage: 1000 VDC	2-pole DC Switch Disconnector	C60NA-DC	SE	SE.A9N61690
=UACJA10GH100+UACJA10	**U50...U52**	3	Linergy DS - screw distribution block 1P - 125A - 10 holes	Distribution block	Linergy DS	SE	SE.LGY112510

CONFIDENTIAL, ALL RIGHTS RESERVED DIN 34

Format ISO/DIN A3

Approved by Contractor			Reconstruction and Modernisation of HPP Perucica - Phase II	epcg	SINTAKSA A Voith Company Sintaksa - A Voith Company Ulica Domovinskog rata 104Ć, 21 000 Split, Hrvatska	Unit KA1 control cubicle circuit diagrams	DRAWING No.: PERU-01-19-170-31-001	REV No.:	= UACJA10GH100
Approved by Designer	Grga Kolić	15.6.2026.							+ UACJA10
Checked by	Antonio Aleksić	15.6.2026.				Summarized parts list	Designer No.:	SALES No.:	PAGE 155
Drawn by	Tamara Trogrlić	15.6.2026.	PROJECT NAME	EMPLOYER	DESIGNER				PAGE 155 / 156

Device Tag (Location + Displayed DT)		Qty.	Description	Designation	Type number	Manufacturer	Part number
=UACJA10GH100+UACJA10	**U101;U102**	2	SITOP PSU8200M 20A stabilized power supply input: 120-230 V AC 110-220 V DC output: 24 V DC/20 A	Power supply	SITOP PSU8200	SIE	SIE.6EP1336-3BA10
=UACJA10GH100+UACJA10	**U201**	1	VOITH Frequency converter with electrical isolation for measuring the speed from the residual voltage of the generator in connection with a speed transducer.	Measuring instrument	VFU1	VOITH	VOITH.VFU1
=UACJA10GH100+UACJA10	**U300;U301**	2	24 V DC 8x 10/100 Mbit/s twisted pair ports with RJ45 sockets LED diagnostics Type: Scalance XB008 Order No.: 6GK5008-0BA10-1AB2	Ethernet switch	6GK5008-0BA10-1AB2	SIE	SIE.6GK5008-0BA10-1AB2
=UACJA10GH100+UACJA10	**V1;V2**	2	Circuit configuration: Two diodes doubler circuit, two diodes common cathode, two diodes common anode, single diode Vf - Forward Voltage: 1.35 V Vr - Reverse Voltage: 800 V	Diode	DD100KB80	SanRex	DD100KB80
=UACJA10GH100+UACJA10	**V101**	1	Input/output: DC 24-48V/40A Suitable for decoupling two SITOP power supplies with max. 20 A output current each	Redundancy module	SITOP RED1200	SIE	SIE.6EP4347-7RB00-0AX0
=UACJA10GH100+UACJA10	**X0;X10**	7	Feed-through terminal block, nom. voltage: 800 V, nominal current: 32 A, number of connections: 2, connection method: Push-in connection, Rated cross section: 4 mm2, cross section: 0.2 mm2 - 6 mm2, mounting type: NS 35/7,5, NS 35/15, color: gray	PT 4 Feed-through terminal block	3211757	PXC	PXC.3211757
=UACJA10GH100+UACJA10	**X0;X13...X16;X51;X61 X62;X71...X73;X110 X131...X147**	400	Feed-through terminal block, nom. voltage: 800 V nominal current: 24 A number of connections: 2 number of positions: 1 connection method: Push-in connection Rated cross section: 2.5 mm2 cross section: 0.14 mm2 - 4 mm2 mounting type: NS 35/7,5, NS 35/15 color: gray	PT 2,5 Feed-through terminal block	3209510	PXC	PXC.3209510
=UACJA10GH100+UACJA10	**X0;X61**	4	Ground terminal, number of connections: 2, connection method: Push-in connection, cross section: 0.14 mm2 - 4 mm2, mounting type: NS 35/7,5, NS 35/15, color: green-yellow	PT 2,5-PE Ground terminal	3209536	PXC	PXC.3209536
=UACJA10GH100+UACJA10	**X50**	6	PTTB 2,5-2DIO/O-UR/UL-UR - Component terminal block	Component terminal block	3215041	PXC	PXC.3215041
=UACJA10GH100+UACJA10	**X101**	1	Rated voltage: 250V, 50Hz Rated current: 16A	Socket-outlet	A9A15310	SE	SE.A9A15310
=UACJA10GH100+UACJA10	**XT1...XT4**	34	Test disconnect terminal block, nom. voltage: 500 V, nominal current: 41 A, connection method: Screw connection, 1 level, Rated cross section: 6 mm2, cross section: 0.5 mm2 - 10 mm2 , mounting type: NS 35/7,5, NS 35/15, NS 32, color: gray	URTK 6 Test disconnect terminal block	3026272	PXC	PXC.3026272
=UACJA10GH100+UACJA10	**XT1...XT4**	13	Slide-type terminal block, with slide, nom. voltage: 400 V, nominal current: 41 A, number of connections: 2, connection method: Screw connection, 1 level, Rated cross section: 6 mm2, cross section: 0.5 mm2 - 10 mm2, mounting type: NS 35/7,5, NS 35/15, NS 32, color: gray	UGSK 6 Test disconnect terminal block	3026285	PXC	PXC.3026285

CONFIDENTIAL, ALL RIGHTS RESERVED DIN 34

Format ISO/DIN A3

155

Approved by Contractor			Reconstruction and Modernisation of HPP Perucica - Phase II	epcg	SINTAKSA A Voith Company Sintaksa - A Voith Company Ulica Domovinskog rata 104C, 21 000 Split, Hrvatska	Unit KA1 control cubicle circuit diagrams Summarized parts list	DRAWING No.: PERU-01-19-170-31-001	REV No.:	= UACJA10GH100
Approved by Designer	Grga Kolić	15.6.2026.							+ UACJA10
Checked by	Antonio Aleksić	15.6.2026.					Designer No.:	SALES No.:	PAGE 156
Drawn by	Tamara Trogrlić	15.6.2026.	PROJECT NAME	EMPLOYER	DESIGNER				PAGE 156 / 156